ROHS COMPLIANT

PRODUCT DATA DRAWING

REVISION HISTORY			
REV	DESCRIPTION	DATE	APPROVED
-	REL.DCN 31895	01/05	CCC
A	DCN 38280	06/11	STW

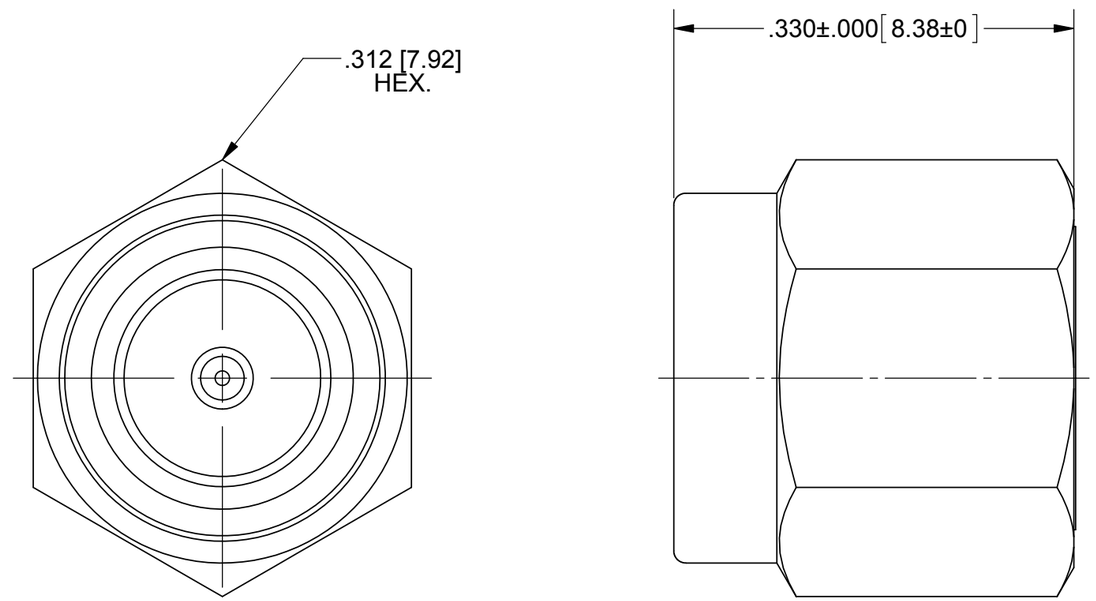

MATERIAL:

BODY & COUPLING NUT: STAINLESS STEEL PER AMS-5640, ALLOY UNS S30300, TYPE 1

LOCK RING & CONTACT: BERYLLIUM COPPER PER ASTM B196

INSULATOR: PTFE PER ASTM D1710, TYPE I, GRADE 1, CLASS B

GASKET: SILICONE RUBBER PER ZZ-R-765, CLASS 2B, GRADE 50/60

RESISTOR ELEMENT: ALUMINA SUBSTRATE WITH NICHROME RESISTOR

FINISH:

BODY: GOLD PER ASTM B 488, TYPE I, GRADE C, CLASS 1.27, OVER NICKEL PER AMS-QQ-N-290, CLASS 1

COUPLING NUT: GOLD PER ASTM B 488, TYPE I, GRADE C, CLASS .50, OVER NICKEL PER AMS-QQ-N-290, CLASS 1

CONTACT: GOLD PER ASTM B 488, TYPE I I, GRADE C, CLASS 1.52, OVER NICKEL PER AMS-QQ-N-290, CLASS 1

PERFORMANCE:

IMPEDANCE: 50 OHMS
FREQ. RANGE: DC TO 18.0 GHz
VSWR: 1.10:1 DC TO 18.0 GHz
OPERATING TEMP.: -55°C TO +125°C
AVG. POWER: 1 WATT (POWER INPUT DERATED LINEARLY FROM 25°C TO .25 WATTS AT 125°C)

MATERIAL: SEE NOTES
FINISH: SEE NOTES
SURFACE AREA: N/A

PROPRIETARY

THE INFORMATION CONTAINED IN THIS DRAWING IS THE SOLE PROPERTY OF SV MICROWAVE, INC. ANY REPRODUCTION IN PART OR AS A WHOLE WITHOUT THE WRITTEN PERMISSION OF SV MICROWAVE, INC IS PROHIBITED.

DIMENSIONS ARE IN INCHES TOLERANCES:
FRACTIONAL: ±1/64 ANGULAR: X° ±1°0' X°X' ±15'
DECIMAL: .X ±.030 .XX ±.010 .XXX ±.005

INTERPRET DIMENSIONS AND TOLERANCES PER ASME Y14.5M - 1994

THIRD ANGLE PROJECTION

UNLESS OTHERWISE SPECIFIED
1) ALL DIMENSIONS ARE IN INCHES [MILLIMETERS]
2) ALL DIMENSIONS ARE AFTER PLATING.
3) BREAK CORNERS & EDGES .005 R. MAX.
4) CHAM. 1ST & LAST THREADS.
5) SURFACE ROUGHNESS 63₳MIL-STD-10.
6) DIA.'S ON COMMON CENTERS TO BE CONCENTRIC WITHIN .005 T.I.R.
7) REMOVE ALL BURRS

DRAWN:	MGT	01/14/05
CHECKED:	CCC	01/14/05
APPROVED:	CCC	01/14/05

SV Microwave, Inc.
2400 Centrepark West Drive, Suite 100
West Palm Beach, FL 33409

TITLE: SMA 1 WATT PLUG TERMINATION

SIZE: B | CAGE CODE: 95077 | DWG. NO. 8018-6061

SCALE: 8:1 | SHEET 1 OF 1