THIS DRAWING IS UNPUBLISHED. RELEASED FOR PUBLICATION 20
© COPYRIGHT 20 BY TYCO ELECTRONICS CORPORATION, ALL RIGHTS RESERVED.

LOC	DIST
HM	00

REVISIONS

P	LTR	DESCRIPTION	DATE	DWN	APVD
	A	RLSD; ECO-10-022199	02NOV2010	GG	DC

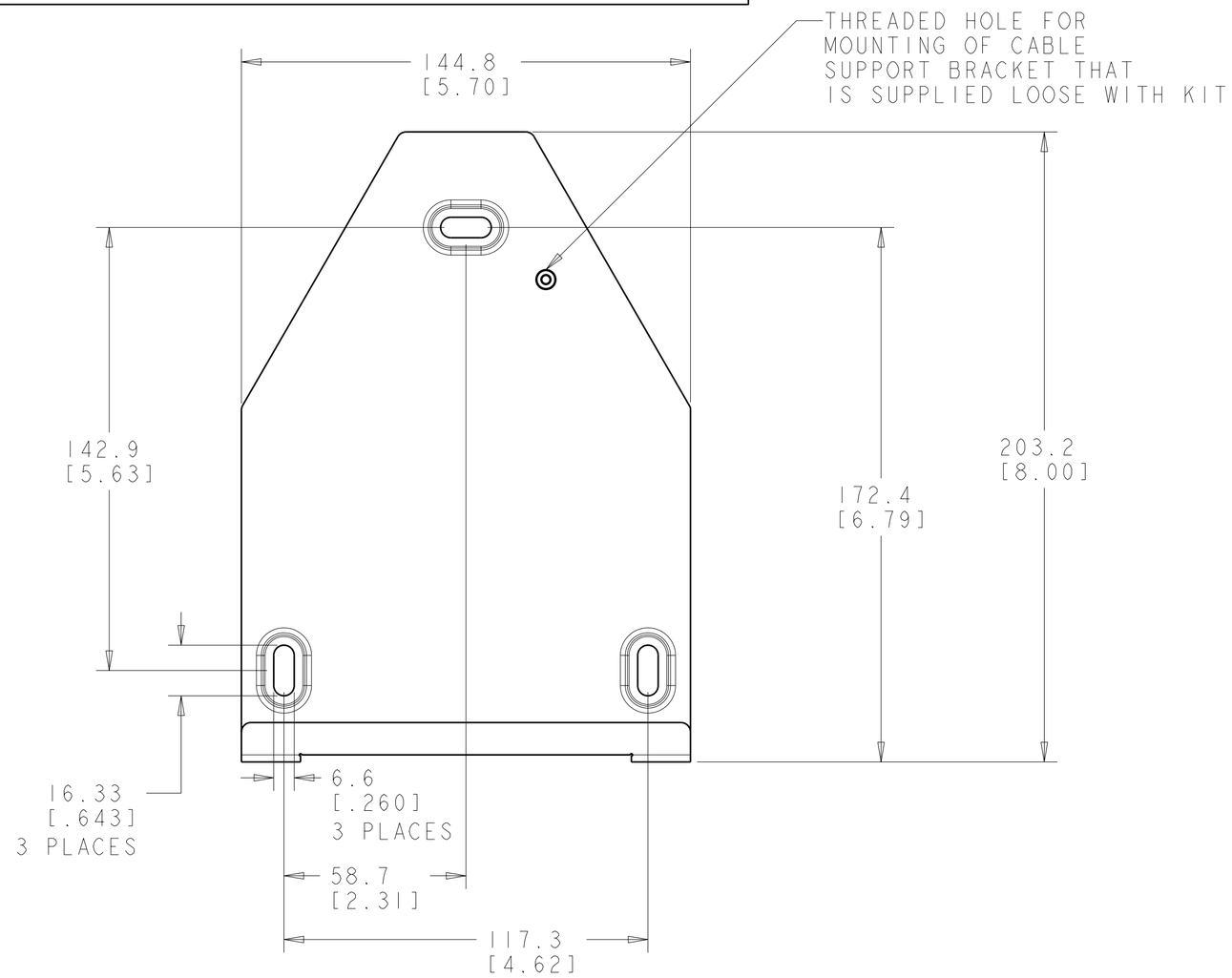

1. THE FOLLOWING ITEMS ARE BAGGED AND PACKAGED WITH BRACKET.

   (2) 1/4"-14 WOOD SCREWS FOR WALL MOUNT

   (1) CABLE SUPPORT BRACKET WITH 10-32 SCREW AND LOCKWASHER

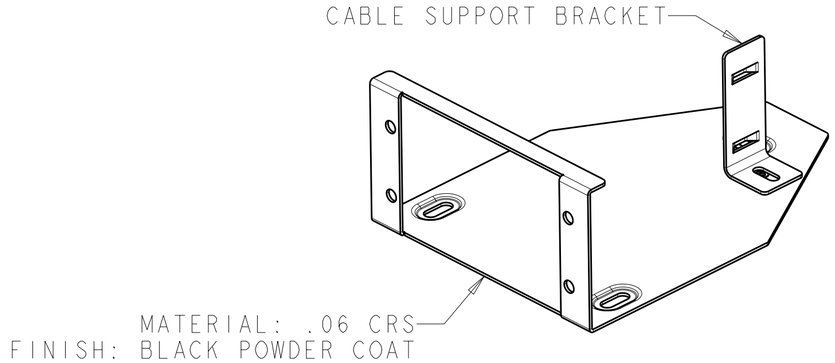

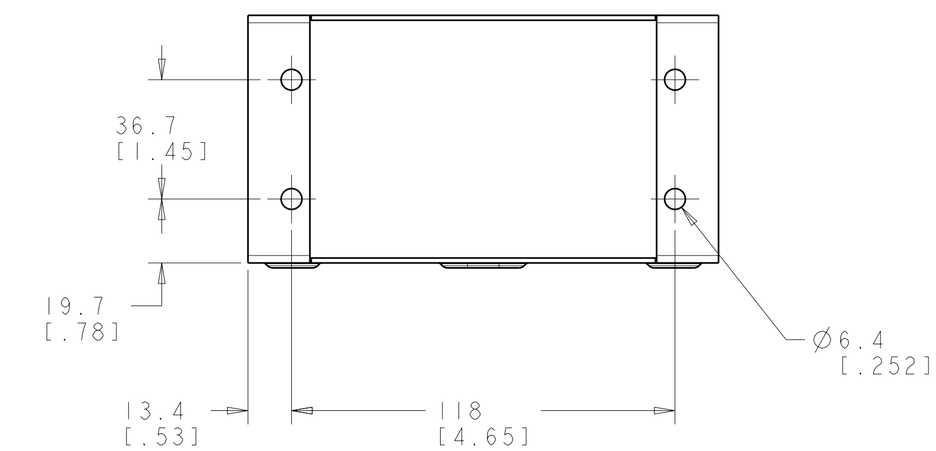

1933981-1
PART NUMBER

THIS DRAWING IS A CONTROLLED DOCUMENT FOR TYCO ELECTRONICS CORPORATION. IT IS SUBJECT TO CHANGE AND THE CONTROLLING ENGINEERING ORGANIZATION SHOULD BE CONTACTED FOR THE LATEST REVISION.

DIMENSIONS: INCHES

TOLERANCES UNLESS OTHERWISE SPECIFIED:
0 PLC ±-
1 PLC ±-
2 PLC ±-
3 PLC ±-
4 PLC ±-
ANGLES ±-

MATERIAL: .060 THK
FINISH: -

DWN G. GARRETT 02NOV2010
CHK D. CRAIG 02NOV2010
APVD D. CRAIG 02NOV2010
PRODUCT SPEC -
APPLICATION SPEC -
WEIGHT -

Tyco Electronics
Tyco Electronics
Harrisburg, PA 17105-3608

NAME: KIT, BRACKET, MOUNTING, WALL TWO ADAPTER PLATES OR CASSETTES -

SIZE	CAGE CODE	DRAWING NO	RESTRICTED TO
A2	00779	C-1933981	-

CUSTOMER DRAWING | SCALE .75:1 | SHEET 1 OF 1 | REV A

AMP 1471-9 REV 31MAR2000

Pro/ENGINEER DRAWING