93LC46B/56B/66B

1K/2K/4K 2.0V CMOS Serial EEPROM

FEATURES

- Single supply with programming operation down to 2.0V (Commercial only)
- Low power CMOS technology
  - 1 mA active current typical
  - 5 μA standby current (typical) at 3.0V
- x16 bit organization
- 64x16 (93LC46B)
- 128x16 (93LC56B)
- 256x16 (93LC66B)
- Self-timed ERASE and WRITE cycles (including auto-erase)
- Automatic ERAL before WRAL
- Power on/off data protection circuitry
- Industry standard 3-wire serial I/O
- Device status signal during ERASE/WRITE cycles
- Sequential READ function
- **10,000,000 ERASE/WRITE cycles guaranteed on 93LC56B and 93LC66B**
- **1,000,000 E/W cycles guaranteed on 93LC46B***
- Data retention > 200 years
- 8-pin PDIP/SOIC and 14-pin SOIC package (SOIC in JEDEC and EIAJ standards)
- Available for extended temperature ranges:
  - Commercial: 0˚C to +70˚C
  - Industrial: -40˚C to +85˚C

DESCRIPTION

The Microchip Technology Inc. 93LC46B/56B/66B are 1K, 2K and 4K low voltage serial Electrically Erasable PROMs. The device memory is configured as x16. Advanced CMOS technology makes these devices ideal for low power non-volatile memory applications. The 93LC Series is available in standard 8-pin DIP and 8/14-pin surface mount SOIC packages.

BLOCK DIAGRAM

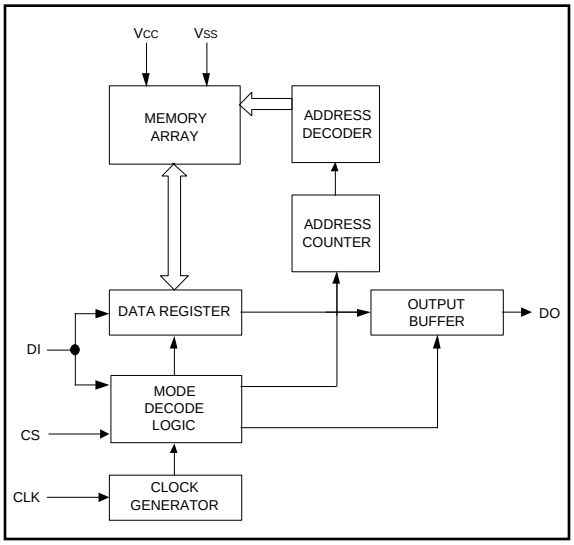

PACKAGE TYPE

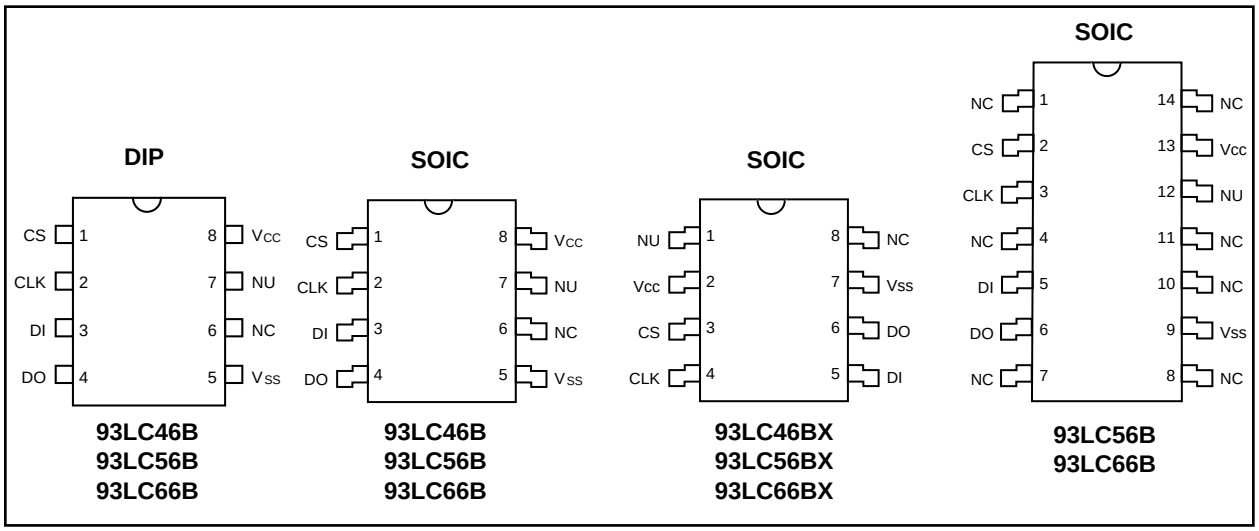

**Future: 10,000,000 E/W cycles guaranteed

© 1995 Microchip Technology Inc.

1.0 ELECTRICAL CHARACTERISTICS

1.1 Maximum Ratings*

V_{CC} 7.0V
All inputs and outputs w.r.t. V_{SS} ....-0.6V to V_{CC} +1.0V
Storage temperature .....-65˚C to +150˚C
Ambient temp. with power applied .....-65˚C to +125˚C
Soldering temperature of leads (10 seconds) ...+300˚C
ESD protection on all pins..... 4 kV

***Notice:** Stresses above those listed under "Maximum ratings" may cause permanent damage to the device. This is a stress rating only and functional operation of the device at those or any other conditions above those indicated in the operational listings of this specification is not implied. Exposure to maximum rating conditions for extended periods may affect device reliability.

TABLE 1-1: PIN FUNCTION TABLE

Name	Function
CS	Chip Select
CLK	Serial Data Clock
DI	Serial Data Input
DO	Serial Data Output
V_{SS}	Ground
NC	No Connect
NU	Not Utilized
V_{CC}	Power Supply

TABLE 1-2: DC AND AC ELECTRICAL CHARACTERISTICS

	Commercial (C): V_{CC} = +2.0V to +6.0V (C): Tamb = 0˚C to +70˚C Industrial (I): V_{CC} = +2.5V to +6.0V (I): Tamb = -40˚C to +85˚C				
Parameter	**Symbol**	**Min**	**Max**	**Units**	**Conditions**
High level input voltage	V_{IH1}	2.0	V_{CC} + 1	V	$V_{CC} \geq 2.7V$
	V_{IH2}	0.7 V_{CC}	V_{CC} + 1	V	V_{CC} < 2.7V
Low level input voltage	V_{IL1}	-0.3	0.8	V	$V_{CC} \geq 2.7V$
	V_{IL2}	-0.3	0.2 V_{CC}	V	V_{CC} < 2.7V
Low level output voltage	V_{OL1}	—	0.4	V	I_{OL} = 2.1 mA; V_{CC} = 4.5V
	V_{OL2}	—	0.2	V	I_{OL} = 100 µA; V_{CC} = Vcc Min.
High level output voltage	V_{OH1}	2.4	—	V	I_{OH} = -400 µA; V_{CC} = 4.5V
	V_{OH2}	V_{CC}-0.2	—	V	I_{OH} = -100 µA; V_{CC} = V_{CC} Min.
Input leakage current	I_{LI}	-10	10	µA	V_{IN} = 0.1V to V_{CC}
Output leakage current	I_{LO}	-10	10	µA	V_{OUT} = 0.1V to V_{CC}
Pin capacitance (all inputs/outputs)	C_{IN}, C_{OUT}	—	7	pF	V_{IN}/V_{OUT} = 0 V (Note 1 & 3) Tamb = +25˚C, F_{CLK} = 1 MHz
Operating current	I_{CC} write	—	3	mA	F_{CLK} = 2 MHz; V_{CC} = 6.0V (Note 3)
	I_{CC} read	—	1 500	mA µA	F_{CLK} = 2 MHz; V_{CC} = 6.0V F_{CLK} = 1 MHz; V_{CC} = 3.0V
Standby current	I_{CCS}	—	100 30	µA µA	CLK = CS = 0V; V_{CC} = 6.0V CLK = CS = 0V; V_{CC} = 3.0V
Clock frequency	F_{CLK}	—	2 1	MHz MHz	$V_{CC} \geq 4.5V$ V_{CC} < 4.5V
Clock high time	T_{CKH}	250	—	ns	
Clock low time	T_{CKL}	250	—	ns	
Chip select setup time	T_{CSS}	50	—	ns	Relative to CLK
Chip select hold time	T_{CSH}	0	—	ns	Relative to CLK
Chip select low time	T_{CSL}	250	—	ns	
Data input setup time	T_{DIS}	100	—	ns	Relative to CLK
Data input hold time	T_{DIH}	100	—	ns	Relative to CLK
Data output delay time	T_{PD}	—	400	ns	CL= 100 pF
Data output disable time	T_{CZ}	—	100	ns	CL = 100 pF (Note 3)
Status valid time	T_{SV}	—	500	ns	CL= 100 pF
Program cycle time	T_{WC}	—	10	ms	ERASE/WRITE mode (Note 2)
	T_{EC}	—	15	ms	ERAL mode
	T_{WL}	—	30	ms	WRAL mode

Note 1: This parameter is tested at tamb = 25˚C and F_{CLK} = 1 MHz.
Note 2: Typical program cycle time is 4 ms per word.
Note 3: This parameter is periodically sampled and not 100% tested.

© 1995 Microchip Technology Inc.

TABLE 1-3: INSTRUCTION SET FOR 93LC46B

Instruction	SB	Opcode	Address	Data In	Data Out	Req. CLK Cycles
READ	1	10	A5 A4 A3 A2 A1 A0	—	D15 - D0	25
EWEN	1	00	1 1 X X X X	—	High-Z	9
ERASE	1	11	A5 A4 A3 A2 A1 A0	—	(RDY/$\overline{\text{BSY}}$)	9
ERAL	1	00	1 0 X X X X	—	(RDY/$\overline{\text{BSY}}$)	9
WRITE	1	01	A5 A4 A3 A2 A1 A0	D15 - D0	(RDY/$\overline{\text{BSY}}$)	25
WRAL	1	00	0 1 X X X X	D15 - D0	(RDY/$\overline{\text{BSY}}$)	25
EWDS	1	00	0 0 X X X X	—	High-Z	9

TABLE 1-4: INSTRUCTION SET FOR 93LC56B

Instruction	SB	Opcode	Address	Data In	Data Out	Req. CLK Cycles
READ	1	10	X A6 A5 A4 A3 A2 A1 A0	—	D15 - D0	27
EWEN	1	00	1 1 X X X X X X	—	High-Z	11
ERASE	1	11	X A6 A5 A4 A3 A2 A1 A0	—	(RDY/$\overline{\text{BSY}}$)	11
ERAL	1	00	1 0 X X X X X X	—	(RDY/$\overline{\text{BSY}}$)	11
WRITE	1	01	X A6 A5 A4 A3 A2 A1 A0	D15 - D0	(RDY/$\overline{\text{BSY}}$)	27
WRAL	1	00	0 1 X X X X X X	D15 - D0	(RDY/$\overline{\text{BSY}}$)	27
EWDS	1	00	0 0 X X X X X X	—	High-Z	11

TABLE 1-5: INSTRUCTION SET FOR 93LC66B

Instruction	SB	Opcode	Address	Data In	Data Out	Req. CLK Cycles
READ	1	10	A7 A6 A5 A4 A3 A2 A1 A0	—	D15 - D0	27
EWEN	1	00	1 1 X X X X X X	—	High-Z	11
ERASE	1	11	A7 A6 A5 A4 A3 A2 A1 A0	—	(RDY/$\overline{\text{BSY}}$)	11
ERAL	1	00	1 0 X X X X X X	—	(RDY/$\overline{\text{BSY}}$)	11
WRITE	1	01	A7 A6 A5 A4 A3 A2 A1 A0	D15 - D0	(RDY/$\overline{\text{BSY}}$)	27
WRAL	1	00	0 1 X X X X X X	D15 - D0	(RDY/$\overline{\text{BSY}}$)	27
EWDS	1	00	0 0 X X X X X X	—	High-Z	11

© 1995 Microchip Technology Inc.

2.0 FUNCTIONAL DESCRIPTION

Instructions, addresses and write data are clocked into the DI pin on the rising edge of the clock (CLK). The DO pin is normally held in a high-Z state except when reading data from the device, or when checking the ready/busy status during a programming operation. The ready/busy status can be verified during an Erase/Write operation by polling the DO pin; DO low indicates that programming is still in progress, while DO high indicates the device is ready. The DO will enter the high-Z state on the falling edge of the CS.

2.1 START Condition

The START bit is detected by the device if CS and DI are both HIGH with respect to the positive edge of CLK for the first time.

Before a START condition is detected, CS, CLK, and DI may change in any combination (except to that of a START condition), without resulting in any device operation (READ, WRITE, ERASE, EWEN, EWDS, ERAL, and WRAL). As soon as CS is HIGH, the device is no longer in the standby mode.

An instruction following a START condition will only be executed if the required amount of opcode, address and data bits for any particular instruction is clocked in.

After execution of an instruction (i.e., clock in or out of the last required address or data bit) CLK and DI become don't care bits until a new start condition is detected.

2.2 DI/DO

It is possible to connect the Data In and Data Out pins together. However, with this configuration it is possible for a “bus conflict” to occur during the “dummy zero” that precedes the READ operation, if A0 is a logic HIGH level. Under such a condition the voltage level seen at Data Out is undefined and will depend upon the relative impedances of Data Out and the signal source driving A0. The higher the current sourcing capability of A0, the higher the voltage at the Data Out pin.

2.3 Data Protection

During power-up, all programming modes of operation are inhibited until V_{CC} has reached a level greater than 1.4V. During power-down, the source data protection circuitry acts to inhibit all programming modes when V_{CC} has fallen below 1.4V at nominal conditions.

The EWEN and EWDS commands give additional protection against accidentally programming during normal operation.

After power-up, the device is automatically in the EWDS mode. Therefore, an EWEN instruction must be performed before any ERASE or WRITE instruction can be executed.

3.0 READ

The READ instruction outputs the serial data of the addressed memory location on the DO pin. A dummy zero bit precedes the 16 bit (x16 organization) output string. The output data bits will toggle on the rising edge of the CLK and are stable after the specified time delay (T_{PD}). Sequential read is possible when CS is held high. The memory data will automatically cycle to the next register and output sequentially.

4.0 ERASE/WRITE ENABLE AND DISABLE

The 93LC46B/56B/66B powers up in the Erase/Write Disable (EWDS) state. All programming modes must be preceded by an Erase/Write Enable (EWEN) instruction. Once the EWEN instruction is executed, programming remains enabled until an EWDS instruction is executed or V_{CC} is removed from the device. To protect against accidental data disturb, the EWDS instruction can be used to disable all Erase/Write functions and should follow all programming operations. Execution of a READ instruction is independent of both the EWEN and EWDS instructions.

5.0 ERASE

The ERASE instruction forces all data bits of the specified address to the logical "1" state. CS is brought low following the loading of the last address bit. This falling edge of the CS pin initiates the self-timed programming cycle.

The DO pin indicates the READY/$\overline{\text{BUSY}}$ status of the device if CS is brought high after a minimum of 250 ns low (T_{CSL}). DO at logical "0" indicates that programming is still in progress. DO at logical "1" indicates that the register at the specified address has been erased and the device is ready for another instruction.

The ERASE cycle takes 4 ms per word (Typical).

6.0 WRITE

The WRITE instruction is followed by 16 bits of data which are written into the specified address. After the last data bit is put on the DI pin, CS must be brought low before the next rising edge of the CLK clock. This falling edge of CS initiates the self-timed auto-erase and programming cycle.

The DO pin indicates the READY/$\overline{\text{BUSY}}$ status of the device if CS is brought high after a minimum of 250 ns low (T_{CSL}) and before the entire write cycle is complete. DO at logical "0" indicates that programming is still in progress. DO at logical "1" indicates that the register at the specified address has been written with the data specified and the device is ready for another instruction.

The WRITE cycle takes 4 ms per word (Typical).

© 1995 Microchip Technology Inc.

7.0 ERASE ALL

The ERAL instruction will erase the entire memory array to the logical "1" state. The ERAL cycle is identical to the ERASE cycle except for the different opcode. The ERAL cycle is completely self-timed and commences at the falling edge of the CS. Clocking of the CLK pin is not necessary after the device has entered the self clocking mode. The ERAL instruction is guaranteed at VCC = +4.5V to +6.0V.

The DO pin indicates the READY/$\overline{\text{BUSY}}$ status of the device if CS is brought high after a minimum of 250 ns low (TCSL) and before the entire write cycle is complete.

The ERAL cycle takes 15 ms maximum (8 ms typical).

8.0 WRITE ALL

The WRAL instruction will write the entire memory array with the data specified in the command. The WRAL cycle is completely self-timed and commences at the falling edge of the CS. Clocking of the CLK pin is not necessary after the device has entered the self clocking mode. The WRAL command does include an automatic ERAL cycle for the device. Therefore, the WRAL instruction does not require an ERAL instruction but the chip must be in the EWEN status. The WRAL instruction is guaranteed at VCC = +4.5V to +6.0V.

The DO pin indicates the READY/$\overline{\text{BUSY}}$ status of the device if CS is brought high after a minimum of 250 ns low (TCSL).

The WRAL cycle takes 30 ms maximum (16 ms typical).

9.0 PIN DESCRIPTION

9.1 Chip Select (CS)

A HIGH level selects the device. A LOW level deselects the device and forces it into standby mode. However, a programming cycle which is already initiated and/or in progress will be completed, regardless of the CS input signal. If CS is brought LOW during a program cycle, the device will go into standby mode as soon as the programming cycle is completed.

CS must be LOW for 250 ns minimum (TCSL) between consecutive instructions. If CS is LOW, the internal control logic is held in a RESET status.

9.2 Serial Clock (CLK)

The Serial Clock is used to synchronize the communication between a master device and the 93LCXXB. Opcode, address, and data bits are clocked in on the positive edge of CLK. Data bits are also clocked out on the positive edge of CLK.

CLK can be stopped anywhere in the transmission sequence (at HIGH or LOW level) and can be continued anytime with respect to clock HIGH time (TCKH) and clock LOW time (TCKL). This gives the controlling master freedom in preparing opcode, address, and data.

CLK is a “Don't Care” if CS is LOW (device deselected). If CS is HIGH, but START condition has not been detected, any number of clock cycles can be received by the device without changing its status (i.e., waiting for START condition).

CLK cycles are not required during the self-timed WRITE (i.e., auto ERASE/WRITE) cycle.

After detection of a start condition the specified number of clock cycles (respectively LOW to HIGH transitions of CLK) must be provided. These clock cycles are required to clock in all required opcode, address, and data bits before an instruction is executed (see instruction set truth table). CLK and DI then become don't care inputs waiting for a new start condition to be detected.

Note:	CS must go LOW between consecutive instructions.

9.3 Data In (DI)

Data In is used to clock in a START bit, opcode, address, and data synchronously with the CLK input.

9.4 Data Out (DO)

Data Out is used in the READ mode to output data synchronously with the CLK input (TPD after the positive edge of CLK).

This pin also provides READY/$\overline{\text{BUSY}}$ status information during ERASE and WRITE cycles. READY/$\overline{\text{BUSY}}$ status information is available on the DO pin if CS is brought HIGH after being LOW for minimum chip select LOW time (TCSL) and an ERASE or WRITE operation has been initiated.

The status signal is not available on DO, if CS is held LOW or HIGH during the entire WRITE or ERASE cycle. In all other cases DO is in the HIGH-Z mode. If status is checked after the WRITE/ERASE cycle, a pull-up resistor on DO is required to read the READY signal.

© 1995 Microchip Technology Inc.

FIGURE 9-1: SYNCHRONOUS DATA TIMING

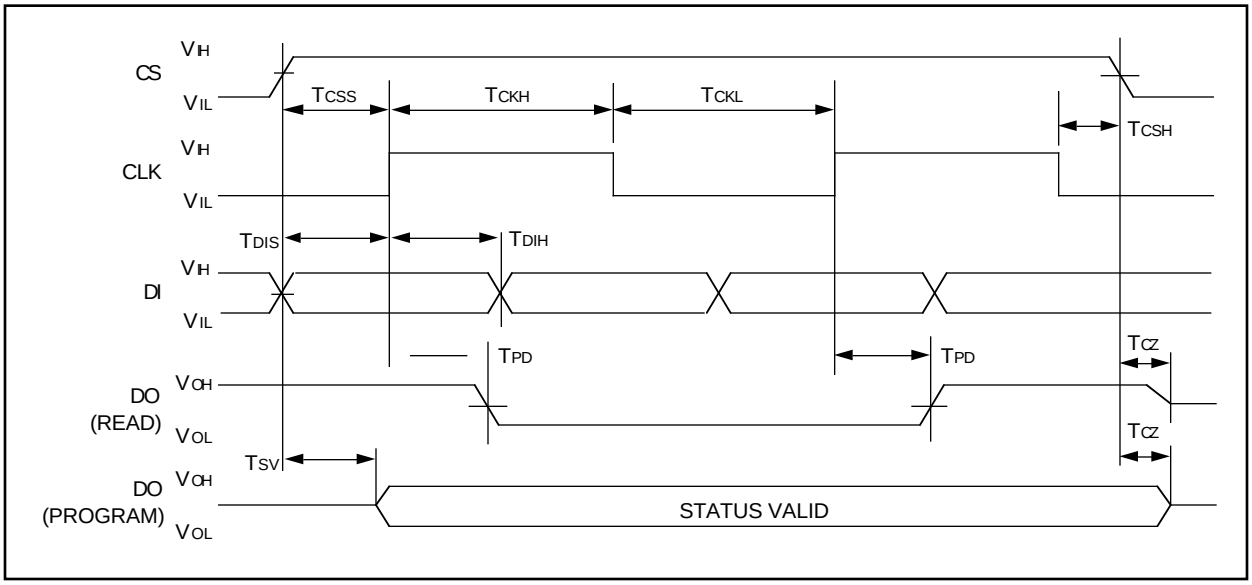

FIGURE 9-2: READ TIMING

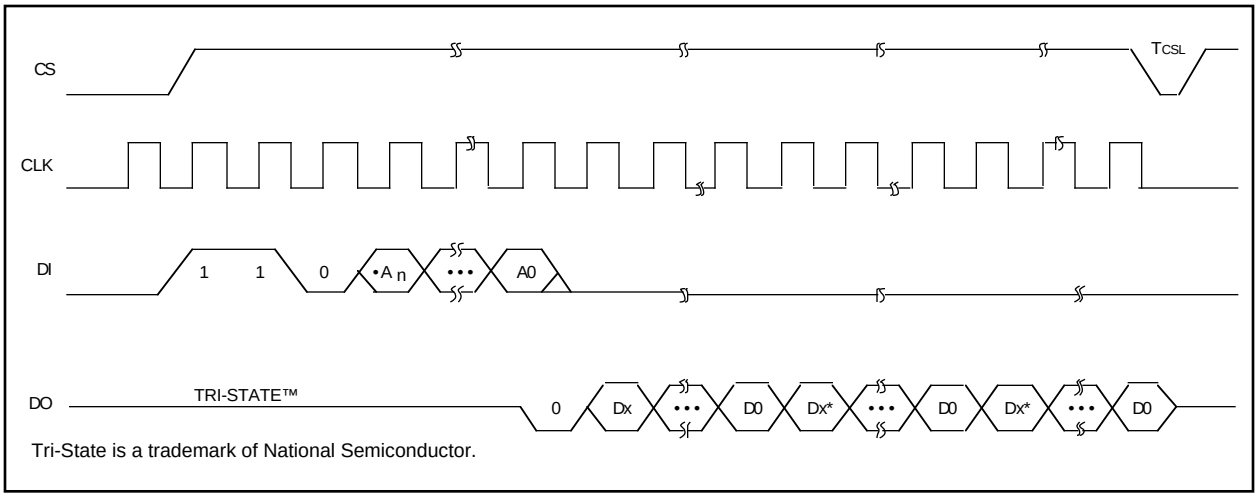

FIGURE 9-3: EWEN TIMING

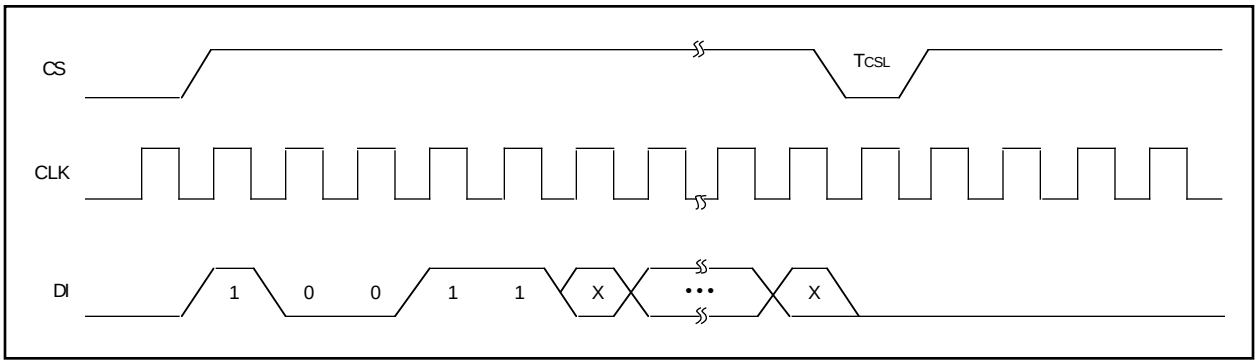

© 1995 Microchip Technology Inc.

FIGURE 9-4: EWDS TIMING

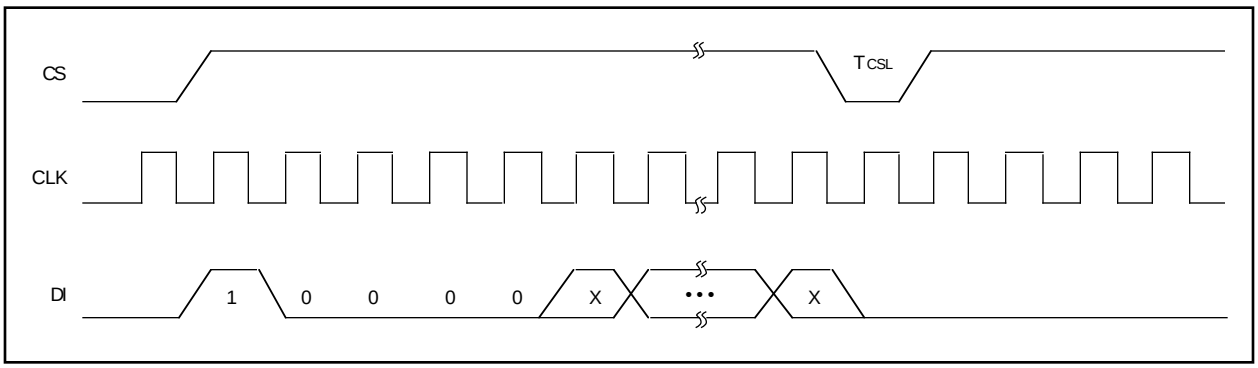

FIGURE 9-5: WRITE TIMING

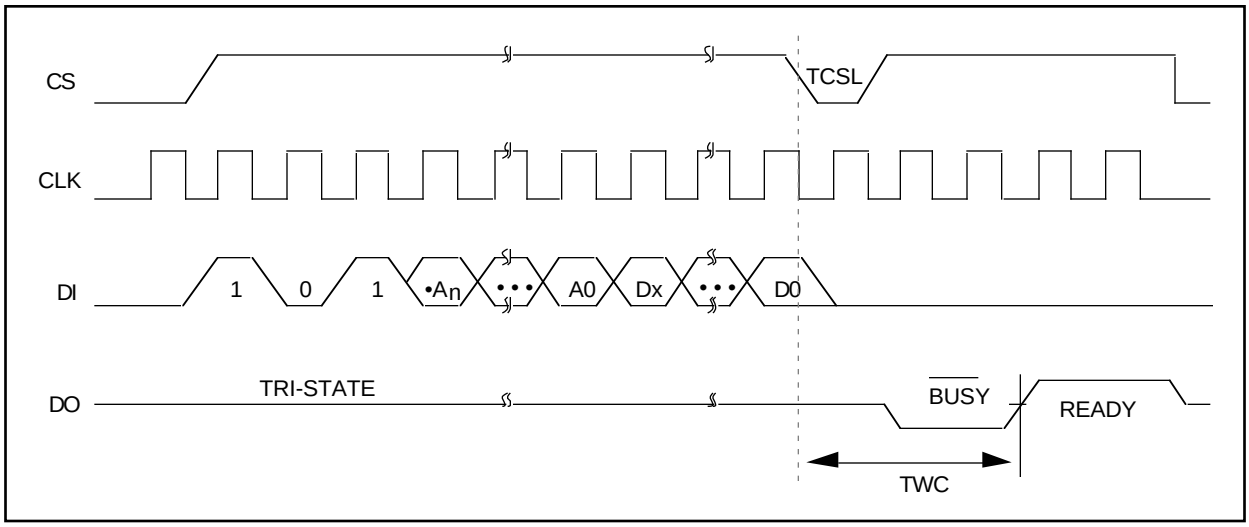

FIGURE 9-6: WRAL TIMING

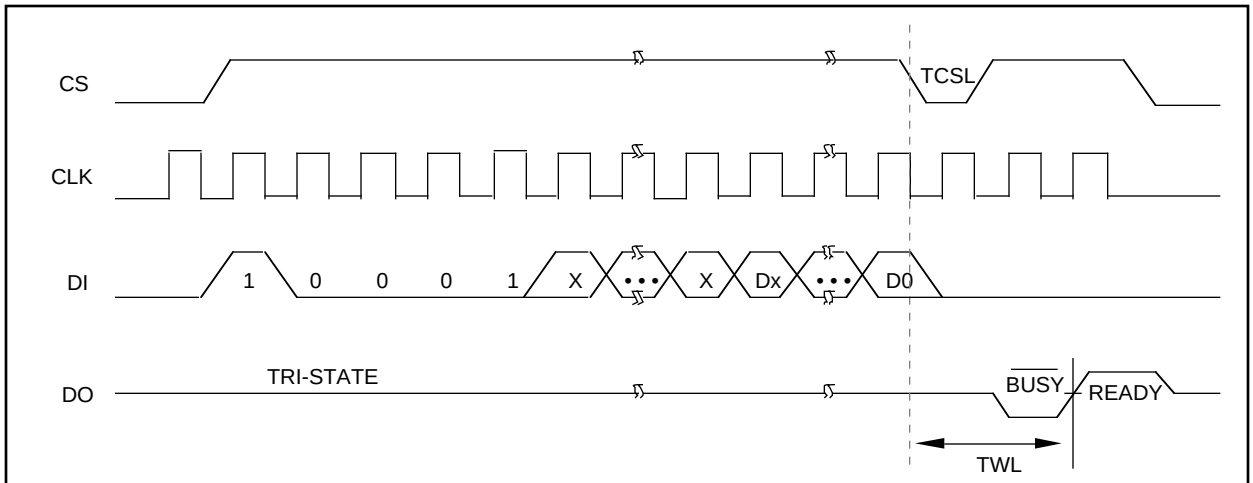

Guarantee at Vcc = +4.5V to +6.0V.

FIGURE 9-7: ERASE TIMING

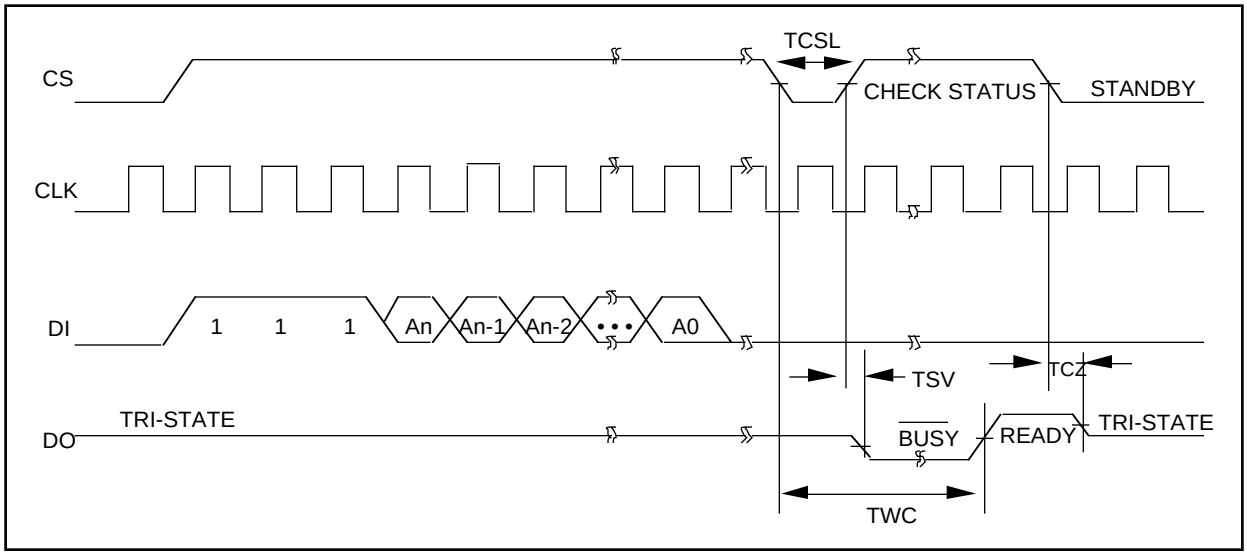

FIGURE 9-8: ERAL TIMING

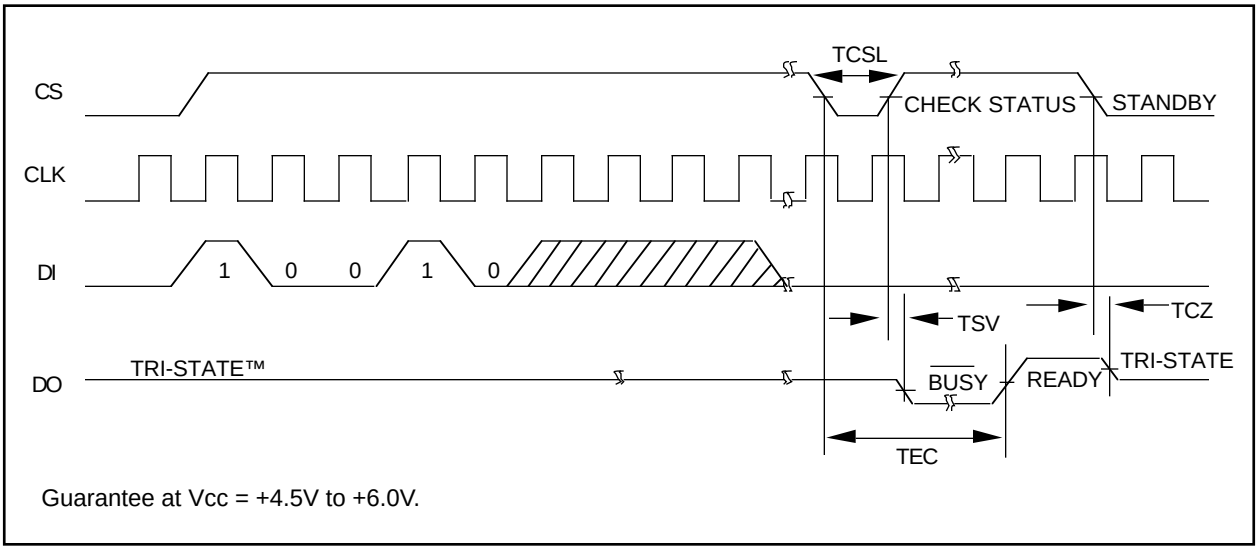

Guarantee at Vcc = +4.5V to +6.0V.

© 1995 Microchip Technology Inc.

NOTES

93LC46B/56B/66B Product Identification System

To order or to obtain information, e.g., on pricing or delivery, please use the listed part numbers, and refer to the factory or the listed sales offices.

93LC46B/56B/66B - /P

Package:
P = Plastic DIP (300 mil Body), 8-lead
SN = Plastic SOIC (150 mil Body), 8-lead
SM = Plastic SOIC (207 mil Body), 8-lead
SL = Plastic SOIC (150 mil Body), 14-lead (93LC56B/93LC66B)

Temperature Range:
Blank = 0°C to +70°C
I = -40°C to +85°C

Device:

	Configuration
93LC46B/56B/66B	CMOS Serial EEPROM
93LC46BX/56BX/66BX	CMOS Serial EEPROM in alternate pinouts (SN package only)
93LC46BT/56BT/66BT	CMOS Serial EEPROM (Tape and Reel)
93LC46BXT/56BXT/66BXT	CMOS Serial EEPROM (Tape and Reel)

AMERICAS

Corporate Office
Microchip Technology Inc.
2355 West Chandler Blvd.
Chandler, AZ 85224-6199
Tel: 602 786-7200 Fax: 602 786-7277
Technical Support: 602 786-7627
Web: http://www.mchip.com/biz/mchip

Atlanta
Microchip Technology Inc.
500 Sugar Mill Road, Suite 200B
Atlanta, GA 30350
Tel: 770 640-0034 Fax: 770 640-0307

Boston
Microchip Technology Inc.
5 Mount Royal Avenue
Marlborough, MA 01752
Tel: 508 480-9990 Fax: 508 480-8575

Chicago
Microchip Technology Inc.
333 Pierce Road, Suite 180
Itasca, IL 60143
Tel: 708 285-0071 Fax: 708 285-0075

Dallas
Microchip Technology Inc.
14651 Dallas Parkway, Suite 816
Dallas, TX 75240-8809
Tel: 214 991-7177 Fax: 214 991-8588

Dayton
Microchip Technology Inc.
35 Rockridge Road
Englewood, OH 45322
Tel: 513 832-2543 Fax: 513 832-2841

Los Angeles
Microchip Technology Inc.
18201 Von Karman, Suite 455
Irvine, CA 92715
Tel: 714 263-1888 Fax: 714 263-1338

New York
Microchip Technology Inc.
150 Motor Parkway, Suite 416
Hauppauge, NY 11788
Tel: 516 273-5305 Fax: 516 273-5335

AMERICAS (continued)

San Jose
Microchip Technology Inc.
2107 North First Street, Suite 590
San Jose, CA 95131
Tel: 408 436-7950 Fax: 408 436-7955

ASIA/PACIFIC

Hong Kong
Microchip Technology
Unit No. 3002-3004, Tower 1
Metroplaza
223 Hing Fong Road
Kwai Fong, N.T. Hong Kong
Tel: 852 2 401 1200 Fax: 852 2 401 3431

Korea
Microchip Technology
168-1, Youngbo Bldg. 3 Floor
Samsung-Dong, Kangnam-Ku,
Seoul, Korea
Tel: 82 2 554 7200 Fax: 82 2 558 5934

Singapore
Microchip Technology
200 Middle Road
#10-03 Prime Centre
Singapore 188980
Tel: 65 334 8870 Fax: 65 334 8850

Taiwan
Microchip Technology
10F-1C 207
Tung Hua North Road
Taipei, Taiwan, ROC
Tel: 886 2 717 7175 Fax: 886 2 545 0139

EUROPE

United Kingdom
Arizona Microchip Technology Ltd.
Unit 6, The Courtyard
Meadow Bank, Furlong Road
Bourne End, Buckinghamshire SL8 5AJ
Tel: 44 0 1628 851077 Fax: 44 0 1628 850259

France
Arizona Microchip Technology SARL
2 Rue du Buisson aux Fraises
91300 Massy - France
Tel: 33 1 69 53 63 20 Fax: 33 1 69 30 90 79

Germany
Arizona Microchip Technology GmbH
Gustav-Heinemann-Ring 125
D-81739 Muenchen, Germany
Tel: 49 89 627 144 0 Fax: 49 89 627 144 44

Italy
Arizona Microchip Technology SRL
Centro Direzionale Colleoni
Palazzo Pegaso Ingresso No. 2
Via Paracelso 23, 20041
Agrate Brianza (MI) Italy
Tel: 39 039 689 9939 Fax: 39 039 689 9883

JAPAN

Microchip Technology Intl. Inc.
Benex S-1 6F
3-18-20, Shin Yokohama
Kohoku-Ku, Yokohama
Kanagawa 222 Japan
Tel: 81 45 471 6166 Fax: 81 45 471 6122

9/5/95

MICROCHIP

Printed in the USA, 9/95
© 1995, Microchip Technology Incorporated

"Information contained in this publication regarding device applications and the like is intended through suggestion only and may be superseded by updates. No representation or warranty is given and no liability is assumed by Microchip Technology Incorporated with respect to the accuracy or use of such information, or infringement of patents arising from such use or otherwise. Use of Microchip's products as critical components in life support systems is not authorized except with express written approval by Microchip. No licenses are conveyed, implicitly or otherwise, under any intellectual property rights." The Microchip logo and name are registered trademarks of Microchip Technology Inc. All rights reserved. All other trademarks mentioned herein are the property of their respective companies.

© 1995 Microchip Technology Inc.