THIS COPY IS PROVIDED ON A RESTRICTED BASIS AND IS NOT TO BE USED IN ANY WAY DETRIMENTAL TO THE INTERESTS OF PANDUIT CORP.

A

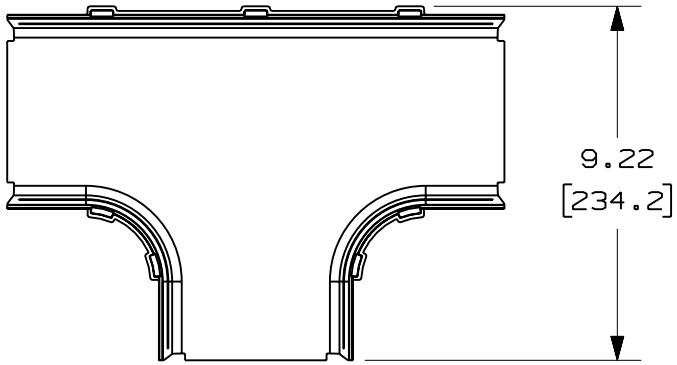

PANDUIT PART NUMBER	WEIGHT
FRT4X4	1.06 LB/EACH (483g/EACH)

C

D NOTES:

1. SEE CURRENT CATALOG FOR ADDITIONAL PART SUFFIXES TO INDICATE COLOR AND/OR PACKAGE QUANTITY.
2. THE FIBERRUNNER 4x4 HORIZONTAL TEE FITTING IS DESIGNED WITH A MINIMUM 2" (50.8) BEND RADIUS TO PROTECT FIBER OPTIC CABLES.
3. DIMENSIONS IN PARENTHESES ARE IN METRIC.

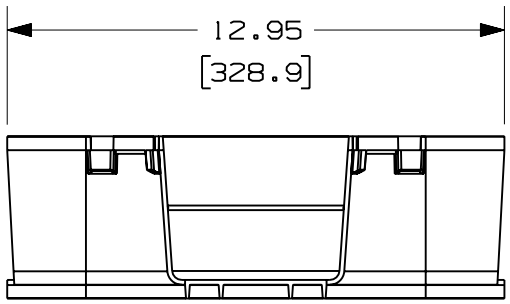

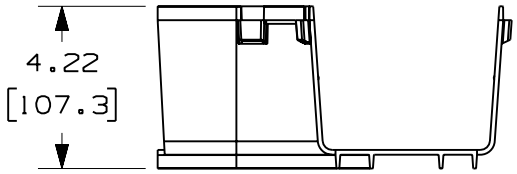

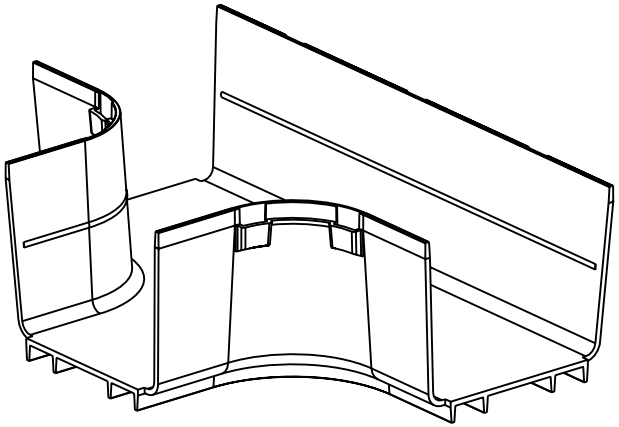

ENG. REF.: D37847B1_DC_FRT4X4_01.prt

CAD FILENAME/LAYERS B FRT4X4.pdf

PANDUIT CORP TINLEY PARK, ILLINOIS

FIBERRUNNER 4x4 HORIZONTAL TEE FITTING (FRT4X4)
CUSTOMER DRAWING

UNLESS OTHERWISE SPECIFIED, DIMENSIONAL TOLERANCES ARE:
(.X) ± (.XXX) ±
(.XX) ±.03 (.8) ANGLES ±

UNLESS OTHERWISE SPECIFIED, ALL DIMENSIONS ARE GIVEN IN INCHES, THIRD ANGLE PROJECTION.

REV	DATE	BY	CHK	DESCRIPTION	ECN	-	R	CUST	SUP	GMBH
-	- - - - - - - -	- - -	- - -	D. REVISED GENERAL NOTES C. REVISED PART WEIGHT	- - - - - - - -	- -	- -			
1	7-14-06	DTP	RN	B. REVISED CAD FILENAME A. REVISED AND REDRAWN	37847-52	RN	RN			

DRAWN BY JHNU
DATE 7-13-01
CHK'D RPA
MAT'L: ABS
SCALE NONE
DRAWING NO. 37847-52
DWG A
SIZE