THIS DRAWING IS UNPUBLISHED. RELEASED FOR PUBLICATION -.- .
© COPYRIGHT - BY TYCO ELECTRONICS CORPORATION, ALL RIGHTS RESERVED.

LOC	DIST
CM	0

REVISIONS

P	LTR	DESCRIPTION	DATE	DWN	APVD
	M	ECO-07-012897	26JUN07	KW	DB

1. MATERIAL:
   CONNECTOR: POLYESTER UL94V-0 (BLUE).
   CONTACTS: 0.30 [.012] THK COPPER ALLOY.
2. CONTACT ACCEPT #26 AWG WIRE WITH 2.41 [.095] MAXIMUM INSULATION DIAMETER.
3. CONNECTOR MATES WITH 1.57±0.20[.062±.008] THICK PC BOARD.
4. HOUSING FEATURES: CLOSED END, STANDARD MOUTH WITH MOUNTING EARS.

6 CONTACT FINISH: BRIGHT TIN-LEAD 0.00203[.000080] MIN THK.

6 CONTACT FINISH: MATTE WHISKER MITIGATEDT TIN 0.00203[.000080] MIN THICKNESS OVER NICKEL UNDERPLATE.

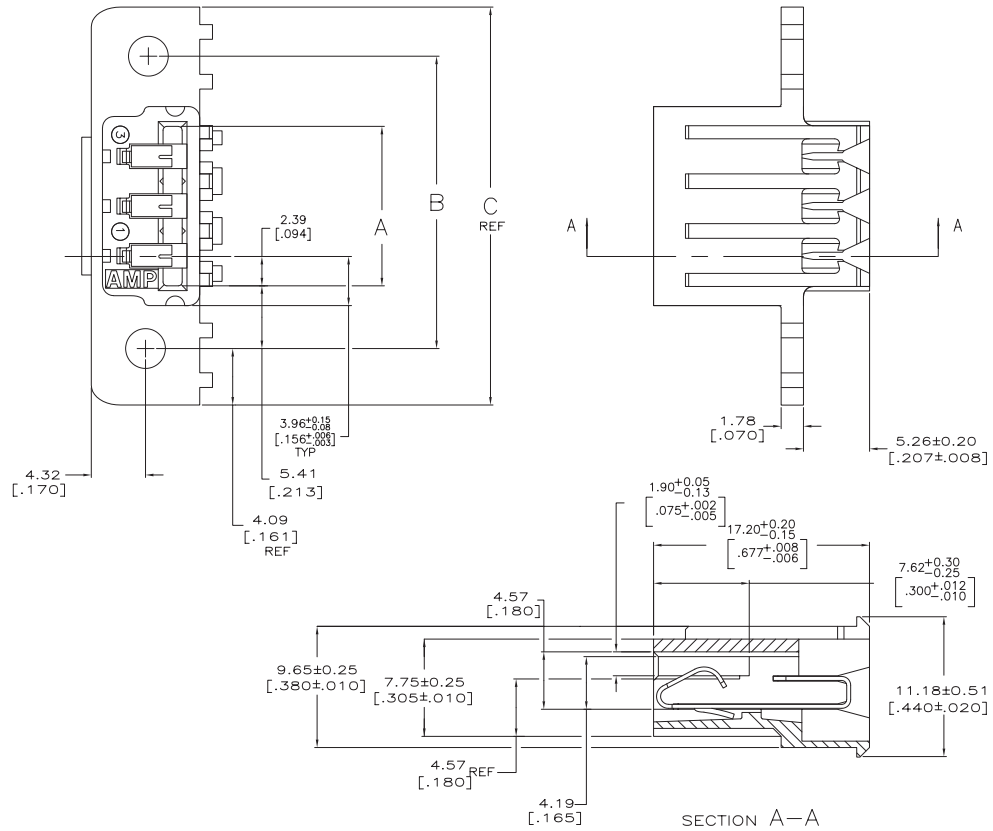

SECTION A–A

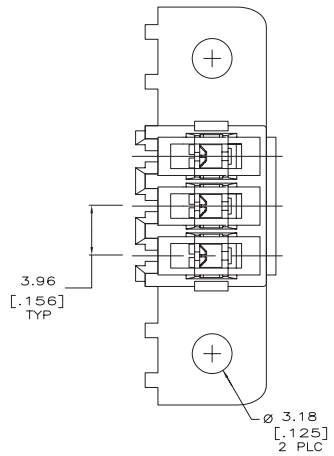

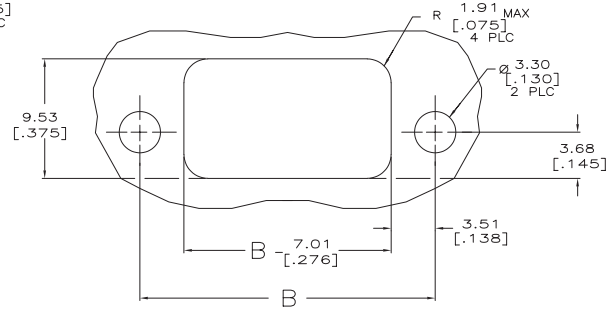

RECOMMENDED PANEL CUTOUT

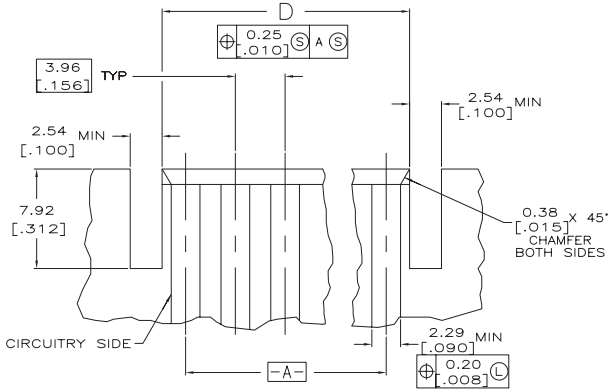

RECOMMENDED P.C. BOARD LAYOUT

6	95.50 [3.760]	114.91 [4.524]	106.73 [4.202]	95.91 [3.776]	24	5-640868-4
	91.54 [3.604]	110.95 [4.368]	102.77 [4.046]	91.95 [3.620]	23	5-640868-3
	87.58 [3.448]	106.98 [4.212]	98.81 [3.890]	87.99 [3.464]	22	5-640868-2
	83.62 [3.292]	103.02 [4.056]	94.84 [3.734]	84.02 [3.308]	21	5-640868-1
	79.65 [3.136]	99.06 [3.900]	90.88 [3.578]	80.06 [3.152]	20	5-640868-0
	71.73 [2.824]	91.14 [3.588]	82.96 [3.266]	72.14 [2.840]	18	4-640868-8
	59.84 [2.356]	79.25 [3.120]	71.07 [2.798]	60.25 [2.372]	15	4-640868-5
	47.96 [1.888]	67.36 [2.652]	59.18 [2.330]	48.36 [1.904]	12	4-640868-2
	36.07 [1.420]	55.47 [2.184]	47.29 [1.862]	36.47 [1.436]	9	3-640868-9
	24.18 [.952]	43.59 [1.716]	35.41 [1.394]	24.59 [.968]	6	3-640868-6
	12.29 [.484]	31.70 [1.248]	23.52 [.926]	12.70 [.500]	3	3-640868-3
5	95.50 [3.760]	114.91 [4.524]	106.73 [4.202]	95.91 [3.776]	24	2-640868-4
	91.54 [3.604]	110.95 [4.368]	102.77 [4.046]	91.95 [3.620]	23	2-640868-3
	87.58 [3.448]	106.98 [4.212]	98.81 [3.890]	87.99 [3.464]	22	2-640868-2
	83.62 [3.292]	103.02 [4.056]	94.84 [3.734]	84.02 [3.308]	21	2-640868-1
	79.65 [3.136]	99.06 [3.900]	90.88 [3.578]	80.06 [3.152]	20	2-640868-0
	71.73 [2.824]	91.14 [3.588]	82.96 [3.266]	72.14 [2.840]	18	1-640868-8
	59.84 [2.356]	79.25 [3.120]	71.07 [2.798]	60.25 [2.372]	15	1-640868-5
	47.96 [1.888]	67.36 [2.652]	59.18 [2.330]	48.36 [1.904]	12	1-640868-2
	36.07 [1.420]	55.47 [2.184]	47.29 [1.862]	36.47 [1.436]	9	640868-9
	24.18 [.952]	43.59 [1.716]	35.41 [1.394]	24.59 [.968]	6	640868-6
	12.29 [.484]	31.70 [1.248]	23.52 [.926]	12.70 [.500]	3	640868-3
CONTACT FINISH	D	C	B	A	NO. OF CIRCUITS	PART NUMBER

THIS DRAWING IS A CONTROLLED DOCUMENT.

DIMENSIONS: mm [INCHES]

TOLERANCES UNLESS OTHERWISE SPECIFIED:
0 PLC ± –
1 PLC ± –
2 PLC ± 0.13 [.005]
3 PLC ± –
4 PLC ± –
ANGLES ± –

MATERIAL: SEE NOTE 1
FINISH: SEE NOTE 1

DWN B. LEWIS 2-20-96
CHK B. SWING 2-20-96
APVD –
PRODUCT SPEC –
APPLICATION SPEC –
WEIGHT –

METRIC

CUSTOMER DRAWING

Tyco Electronics Corporation
Harrisburg, Pa 17105-3608

NAME: MTA-156
CARD EDGE CONNECTOR ASSEMBLY,
26 AWG,PANEL MOUNT

SIZE	CAGE CODE	DRAWING NO	RESTRICTED TO
A1	00779	C-640868	–

SCALE 5:1 SHEET 1 OF 1 REV M