THIS DRAWING IS UNPUBLISHED. RELEASED FOR PUBLICATION -,- .
© COPYRIGHT - BY TYCO ELECTRONICS CORPORATION. ALL INTERNATIONAL RIGHTS RESERVED.

LOC	DIST
—	—

REVISIONS

P	LTR	DESCRIPTION	DATE	DWN	APVD
	B	REDRAWN PER ECO-10-021780	28OCT10	HMR	DR

1. NICKEL 0.00762[.00030] MIN EXT. THK PER AMS QQ-N-290

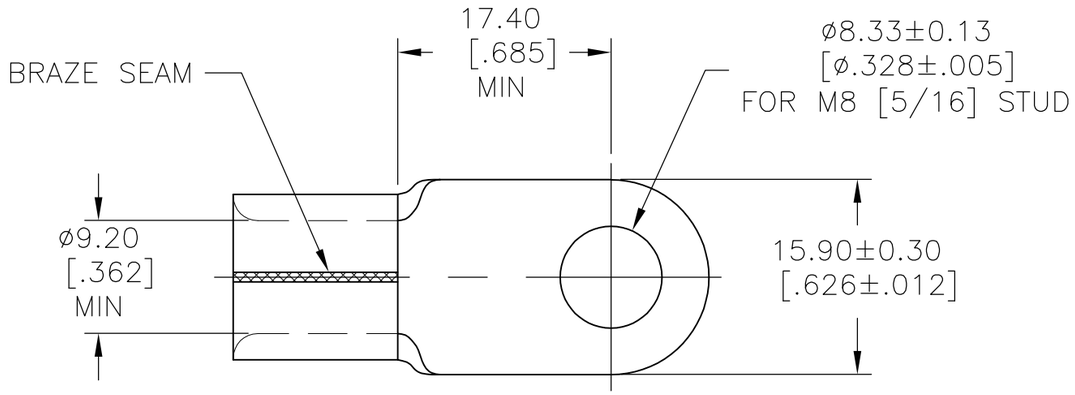

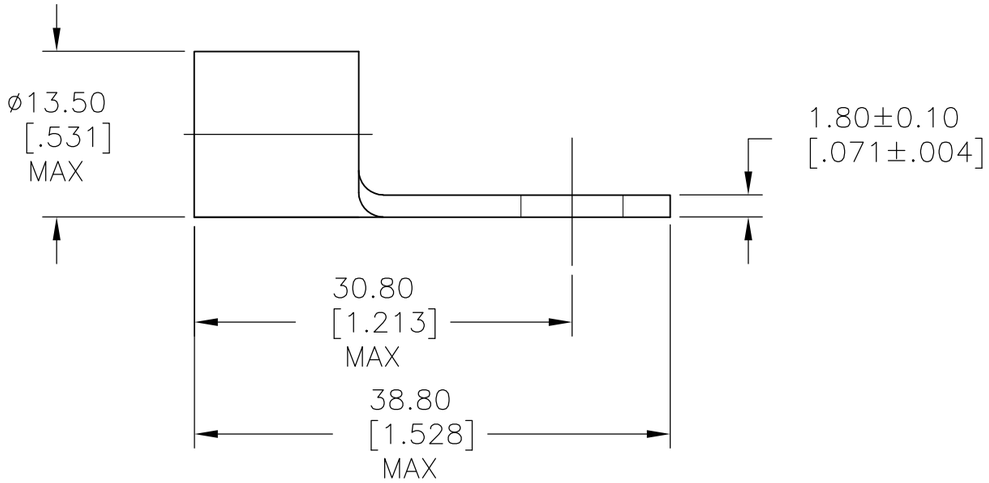

150453
PART NO

AMP INCORPORATED
CUSTOMER SERVICE SYSTEMS

FOR ADDITIONAL PRODUCT INFORMATION OR COPIES OF DRAWINGS AND TECHNICAL DOCUMENTS	PRODUCT INFORMATION CENTER 1-800-522-6752
FOR APPLICATION TOOLING INFORMATION	TOOLING ASSISTANCE CENTER 1-800-722-1111
FOR ORDER ENTRY	1-800-526-5142

THIS DRAWING IS A CONTROLLED DOCUMENT FOR AMP INCORPORATED. IT IS SUBJECT TO CHANGE AND THE CONTROLLING ENGINEERING ORGANIZATION SHOULD BE CONTACTED FOR THE LATEST REVISION.

MAX RECOMMENDED OPERATING TEMPERATURE: 343° C

VOLTAGE RATING: N/A

CIRCULAR MIL AREA: 26.7-42.4 mm²(52,600-83,700) SOLID OR STRANDED

THIS DRAWING IS A CONTROLLED DOCUMENT.

DIMENSIONS: mm [INCHES]

TOLERANCES UNLESS OTHERWISE SPECIFIED:

0 PLC	± -
1 PLC	± -
2 PLC	± 0.20[.008]
3 PLC	± -
4 PLC	± -
ANGLES	± 30'

MATERIAL: COPPER PER ASTM B152

FINISH: 1

DWN	RAGHAVENDRA	28OCT10
CHK	ROHDE DANIEL	28OCT10
APVD	ROHDE DANIEL	28OCT10
PRODUCT SPEC	—	
APPLICATION SPEC	—	
WEIGHT	—	

Tyco Electronics

Tyco Electronics Corporation
Harrisburg, PA 17105-3608

NAME: RING TONGUE, SOLISTRAND STRATOTHERM, HR 2 AWG, 5/16

SIZE	CAGE CODE	DRAWING NO	RESTRICTED TO
A3	00779	C-150453	—

CUSTOMER DRAWING | SCALE 2:1 | SHEET 1 OF 1 | REV B

1470-19 (1/08)