23mm Lithium Coin Cell Battery Holders

Thru Hole Mount (THM)

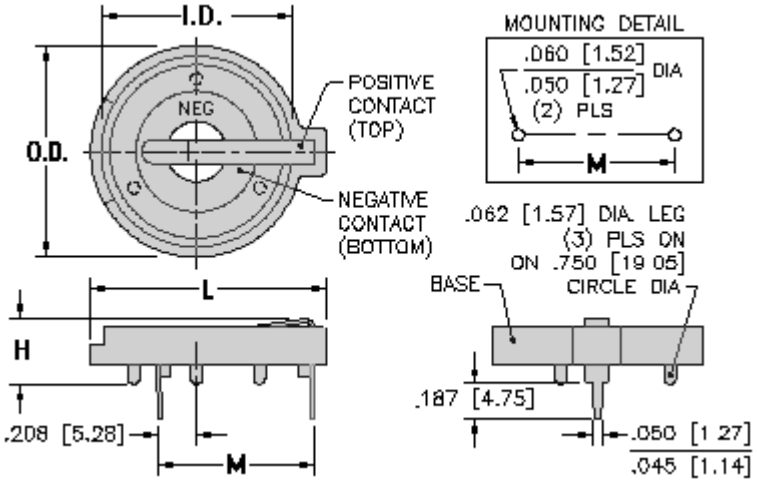

Cat. No.	Cells	Dims.	A	B	C	D	E	L	O.D.	M
104	One	inch	.911	.513	.195	.335	.295	1.150	1.000	.807
		mm	23,13	13,03	4,95	8,50	7,49	29,21	25,40	20,50
107	One	inch	.911	.513	.195	.335	.295	1.219	1.093	.807
		mm	23,13	13,03	4,95	8,50	7,49	30,96	27,76	20,50
1027	Two	inch	.911	.630	.312	.452	.412	1.219	1.093	.807
		mm	23,13	16,00	7,92	11,48	10,46	30,96	27,76	20,50

Positive & Negative Contacts: .020" (0,5mm) Spring Steel, Tin Nickel Plate	
Base Material: PBT UL 94V-0, Black	**Temp. Range:** -60°F to +293°F (-50°C to +145°C)