THIS DRAWING IS UNPUBLISHED. RELEASED FOR PUBLICATION -,- .
© COPYRIGHT - BY TYCO ELECTRONICS CORPORATION. ALL RIGHTS RESERVED.

LOC	DIST
G	14

REVISIONS

P	LTR	DESCRIPTION	DATE	DWN	APVD
	A1	REV PER ECR 07-016469	18JUL07	JR	TM

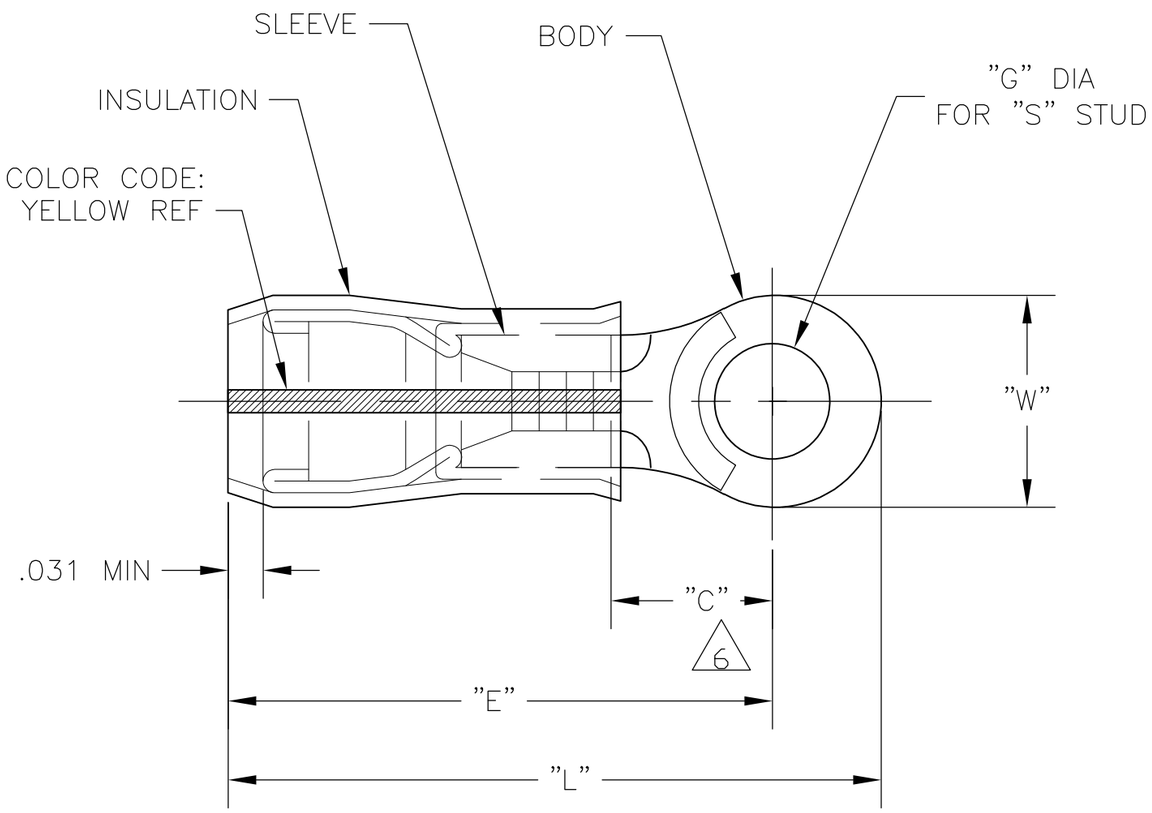

1. STAMP AMP 12-10* APPROX AS SHOWN
2. WIRE INSULATION DIA: .150-.230
3. TONGUE MATERIAL THK: .039±.002
4. BODY & SLEEVE: TIN PLATE PER ASTM B545,
5. BODY & SLEEVE- CU PER ASTM B152
   INSULATION - PVF2, COLOR - NATURAL
6. APPLIES FROM EDGE OF METAL WIRE BARREL TO CENTER OF STUD HOLE.

MILITARY P/N & CLASS	"W"	"C"	"E"	"G" DIA	"S"	"L"	QTY	PACKAGE TYPE	PART NO
M7928/4-158 CLASS 2	.715	.474 MIN	1.054 MAX	.515±.005	1/2"	1.419 MAX	500	LOOSE PIECE	1-696424-0
M7928/4-114 CLASS 2	.593	.531 MIN	1.115 MAX	.390±.005	3/8"	1.419 MAX	500	LOOSE PIECE	696424-9
M7928/4-113 CLASS 2	.531	.468 MIN	1.054 MAX	.328±.005	5/16"	1.327 MAX	500	LOOSE PIECE	696424-8
M7928/4-157 CLASS 2	.531	.468 MIN	1.054 MAX	.265±.005	1/4"	1.327 MAX	500	LOOSE PIECE	696424-7
M7928/4-112 CLASS 2	.375	.302 MIN	.893 MAX	.197±.003	#10	1.088 MAX	500	LOOSE PIECE	696424-6
M7928/4-156 CLASS 2	.375	.302 MIN	.893 MAX	.171±.003	#8	1.088 MAX	500	LOOSE PIECE	696424-5
M7928/4-111 CLASS 2	.375	.302 MIN	.893 MAX	.145±.003	#6	1.088 MAX	500	LOOSE PIECE	696424-4

AMP INCORPORATED
CUSTOMER SERVICE SYSTEMS

FOR ADDITIONAL PRODUCT INFORMATION OR COPIES OF DRAWINGS AND TECHNICAL DOCUMENTS	PRODUCT INFORMATION CENTER 1-800-522-6752
FOR APPLICATION TOOLING INFORMATION	TOOLING ASSISTANCE CENTER 1-800-722-1111
FOR ORDER ENTRY	1-800-526-5142

THIS DRAWING IS A CONTROLLED DOCUMENT FOR AMP INCORPORATED. IT IS SUBJECT TO CHANGE AND THE CONTROLLING ENGINEERING ORGANIZATION SHOULD BE CONTACTED FOR THE LATEST REVISION.

MAX RECOMMENDED OPERATING TEMPERATURE: 150°C MAX

VOLTAGE RATING: -

CIRCULAR MIL AREA: 2.62-6.64mm² [5,180-13,100] STRANDED

THIS DRAWING IS A CONTROLLED DOCUMENT.

DIMENSIONS: INCHES

TOLERANCES UNLESS OTHERWISE SPECIFIED:
0 PLC ± -
1 PLC ± -
2 PLC ± -
3 PLC ± -
4 PLC ± -
ANGLES ± -

MATERIAL - 5

FINISH - 4

DWN	JR RUTH	25JUL05
CHK	T MICHIELUTTI	25JUL05
APVD	T MICHIELUTTI	25JUL05
PRODUCT SPEC	—	
APPLICATION SPEC	—	
WEIGHT	—	

Tyco Electronics
Tyco Electronics Corporation
Harrisburg, Pa 17105-3608

NAME: TERMINAL, RING TONGUE, PVF2 , P.I.D.G. WIRE SIZE: 12-10 AWG

SIZE	CAGE CODE	DRAWING NO	RESTRICTED TO
A3	00779	C-696424	—

CUSTOMER DRAWING

SCALE	SHEET	REV
4:1	1 OF 1	A1