THIS DRAWING IS UNPUBLISHED. RELEASED FOR PUBLICATION -,- .
© COPYRIGHT - By - ALL RIGHTS RESERVED.

LOC	DIST
GP	00

REVISIONS

P	LTR	DESCRIPTION	DATE	DWN	APVD
	AC1	REVISED PER ECO-11-004835	11MAR11	RK	HMR

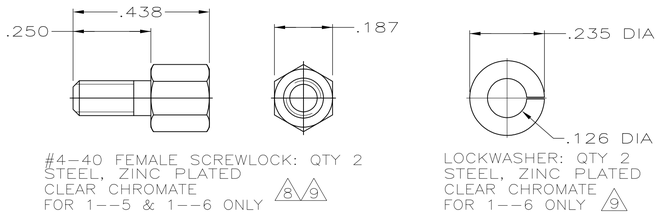

1. CONNECTOR MATES WITH ANY 9 POSN PLUG IN AMPLIMITE™ SERIES & COMPLIES WITH AMP SPEC 108-40005 WHERE APPLICABLE.

2. MOLDED PARTS: FLAME RETARDANT 94V-0 RATED THERMOPLASTIC, BLACK.
SHELL: STEEL PER ASTM A109
CONTACTS: PHOSPHOR BRONZE PER QQ-B-750
EYELETS: BRASS
SCREWLOCKS: ZINC
INSERTS: ZINC

3. SHELL: TIN PLATED
CONTACTS: SEE TABLE
EYELETS: TIN PLATED
SCREWLOCKS: CLEAR CHROMATE
INSERTS: CLEAR CHROMATE

4. GOLD PLATING PER MIL-G-45204, NICKEL PLATING PER QQ-N-290, TIN PER MIL-T-10727.

5. GOLD FLASH FOR A DISTANCE OF .100 MIN FROM MATING END, TIN PLATED .000100-.000200 ON OPPOSITE END, ALL OVER .000050 NICKEL.

6. .000030 GOLD FOR A DISTANCE OF .100 MIN FROM MATING END, TIN PLATED .000100-.000200 ON OPPOSITE END, ALL OVER .000050 NICKEL.

7. .000015 MIN GOLD FOR A DISTANCE OF .100 MIN FROM MATING END, TIN PLATED .000100-.000200 ON OPPOSITE END, ALL OVER .000030 NICKEL.

8. SCREWLOCKS REQUIRED FOR 1--5 CONNECTOR ASSEMBLIES WILL BE BULK PACKED & SHIPPED WITH CONNECTORS.

9. SCREWLOCKS & LOCK WASHERS FOR 1--6 CONNECTOR ASSEMBLIES WILL BE BULK PACKED & SHIPPED WITH CONNECTORS.

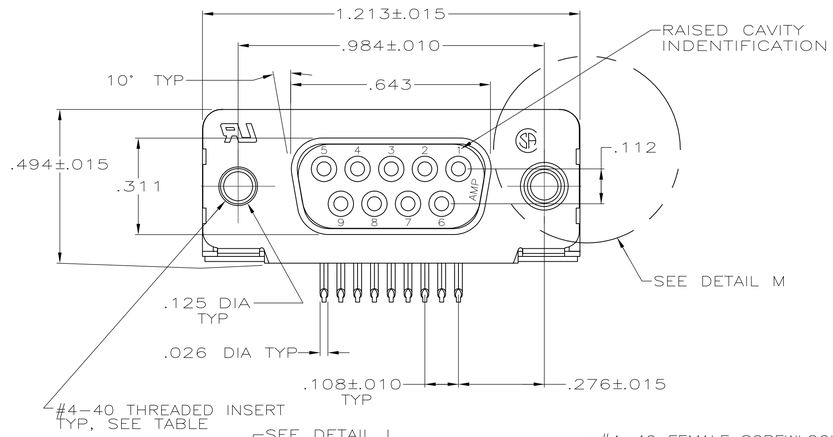

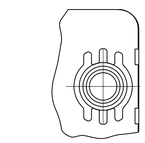

DETAIL M

FOR -5,-6,-7,1--2 & 1--3 ONLY

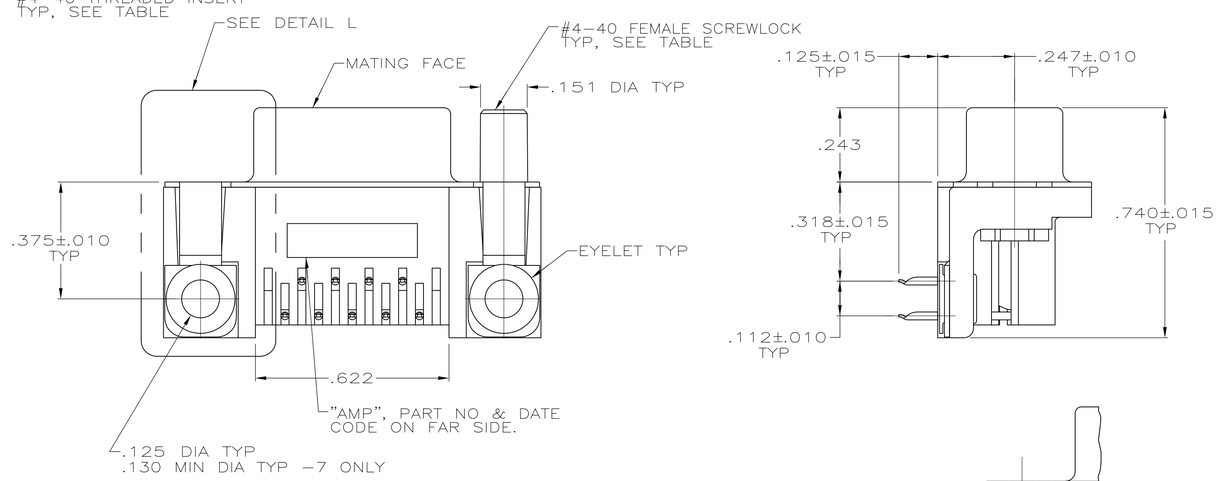

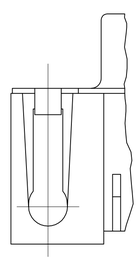

DETAIL L

TYP BOTH ENDS

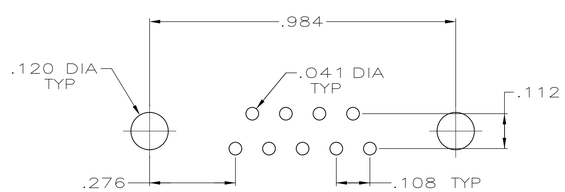

PC BOARD MOUNTING DIMENSIONS

	MOUNTING HARDWARE	SHELL VERSION	CONTACT FINISH 4	PART NUMBER
OBSOLETE	THREADED INSERTS,SCREWLOCKS & LK WASH	GROUNDING STRAPS	6	1-745781-6
OBSOLETE	FEMALE SCREWLOCKS & THREADED INSERTS	GROUNDING STRAPS	5	1-745781-5
OBSOLETE	NONE	GROUNDING STRAPS	7	1-745781-4
OBSOLETE	FEMALE SCREWLOCKS	CLINCH TABS (SEE DETAIL L)	6	1-745781-3
OBSOLETE	FEMALE SCREWLOCKS	CLINCH TABS (SEE DETAIL L)	5	1-745781-2
SUPSD BY 745781-4	THREADED INSERTS	CLINCH TABS (SEE DETAIL L)	6	1-745781-1
SUPSD BY 745781-4	THREADED INSERTS	CLINCH TABS (SEE DETAIL L)	5	1-745781-0
OBSOLETE	NONE	CLINCH TABS (SEE DETAIL L)	6	745781-9
OBSOLETE	NONE	CLINCH TABS (SEE DETAIL L)	5	745781-8
OBSOLETE	FEMALE SCREWLOCKS	GROUNDING STRAPS	7	745781-7
	FEMALE SCREWLOCKS	GROUNDING STRAPS	6	745781-6
SUPSD BY 745781-6	FEMALE SCREWLOCKS	GROUNDING STRAPS	5	745781-5
	THREADED INSERTS	GROUNDING STRAPS	6	745781-4
OBSOLETE	THREADED INSERTS	GROUNDING STRAPS	5	745781-3
OBSOLETE	NONE	GROUNDING STRAPS	6	745781-2
SUPSD BY 745781-2	NONE	GROUNDING STRAPS	5	745781-1

THIS DRAWING IS A CONTROLLED DOCUMENT.

DIMENSIONS: INCHES

TOLERANCES UNLESS OTHERWISE SPECIFIED:
0 PLC ± -
1 PLC ± -
2 PLC ± -
3 PLC ± .005
4 PLC ± -
ANGLES ± 2°

MATERIAL 2 FINISH 3

DWN J GALLUCCI BG 1-23-91
CHK R. STONE 4-26-91
APVD J.W. YOUNG 4-26-91
PRODUCT SPEC 108-40025
APPLICATION SPEC 114-40010
WEIGHT -

TE Connectivity

NAME RCPT ASSY, SIZE 1, 9 POSN, RTANG, AMPLIMITE TM

SIZE	CAGE CODE	DRAWING NO	RESTRICTED TO
A1	00779	C-745781	-

CUSTOMER DRAWING SCALE 4:1 SHEET 1 OF 1 REV AC1

4805 (3/11)