FAIRCHILD SEMICONDUCTOR™

September 1983
Revised July 2003

MM74HC154
4-to-16 Line Decoder

General Description

The MM74HC154 decoder utilizes advanced silicon-gate CMOS technology, and is well suited to memory address decoding or data routing applications. It possesses high noise immunity, and low power consumption of CMOS with speeds similar to low power Schottky TTL circuits.

The MM74HC154 have 4 binary select inputs (A, B, C, and D). If the device is enabled these inputs determine which one of the 16 normally HIGH outputs will go LOW. Two active LOW enables ($\overline{G1}$ and $\overline{G2}$) are provided to ease cascading of decoders with little or no external logic.

Each output can drive 10 low power Schottky TTL equivalent loads, and is functionally and pin equivalent to the 74LS154. All inputs are protected from damage due to static discharge by diodes to V_{CC} and ground.

Features

- Typical propagation delay: 21 ns
- Power supply quiescent current: 80 µA
- Wide power supply voltage range: 2–6V
- Low input current: 1 µA maximum

Ordering Code:

Order Number	Package Number	Package Description
MM74HC154WM	M24B	24-Lead Small Outline Integrated Circuit (SOIC), JEDEC MS-013, 0.300" Wide
MM74HC154MTC	MTC24	24-Lead Thin Shrink Small Outline Package (TSSOP), JEDEC MO-153, 4.4mm Wide
MM74HC154N	N24C	24-Lead Plastic Dual-In-Line Package (PDIP), JEDEC MS-001, 0.300" Wide

Devices also available in Tape and Reel. Specify by appending the suffix letter "X" to the ordering code.

Connection Diagram

Pin Assignments for DIP, SOIC and TSSOP

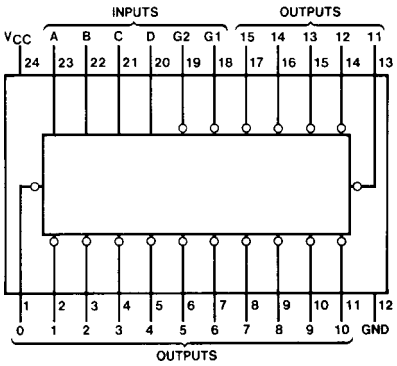

Top View

Truth Table

Inputs						Low
$\overline{G1}$	$\overline{G2}$	D	C	B	A	Output (Note 1)
L	L	L	L	L	L	0
L	L	L	L	L	H	1
L	L	L	L	H	L	2
L	L	L	L	H	H	3
L	L	L	H	L	L	4
L	L	L	H	L	H	5
L	L	L	H	H	L	6
L	L	L	H	H	H	7
L	L	H	L	L	L	8
L	L	H	L	L	H	9
L	L	H	L	H	L	10
L	L	H	L	H	H	11
L	L	H	H	L	L	12
L	L	H	H	L	H	13
L	L	H	H	H	L	14
L	L	H	H	H	H	15
L	H	X	X	X	X	—
H	L	X	X	X	X	—
H	H	X	X	X	X	—

Note 1: All others HIGH

© 2003 Fairchild Semiconductor Corporation

Logic Diagram

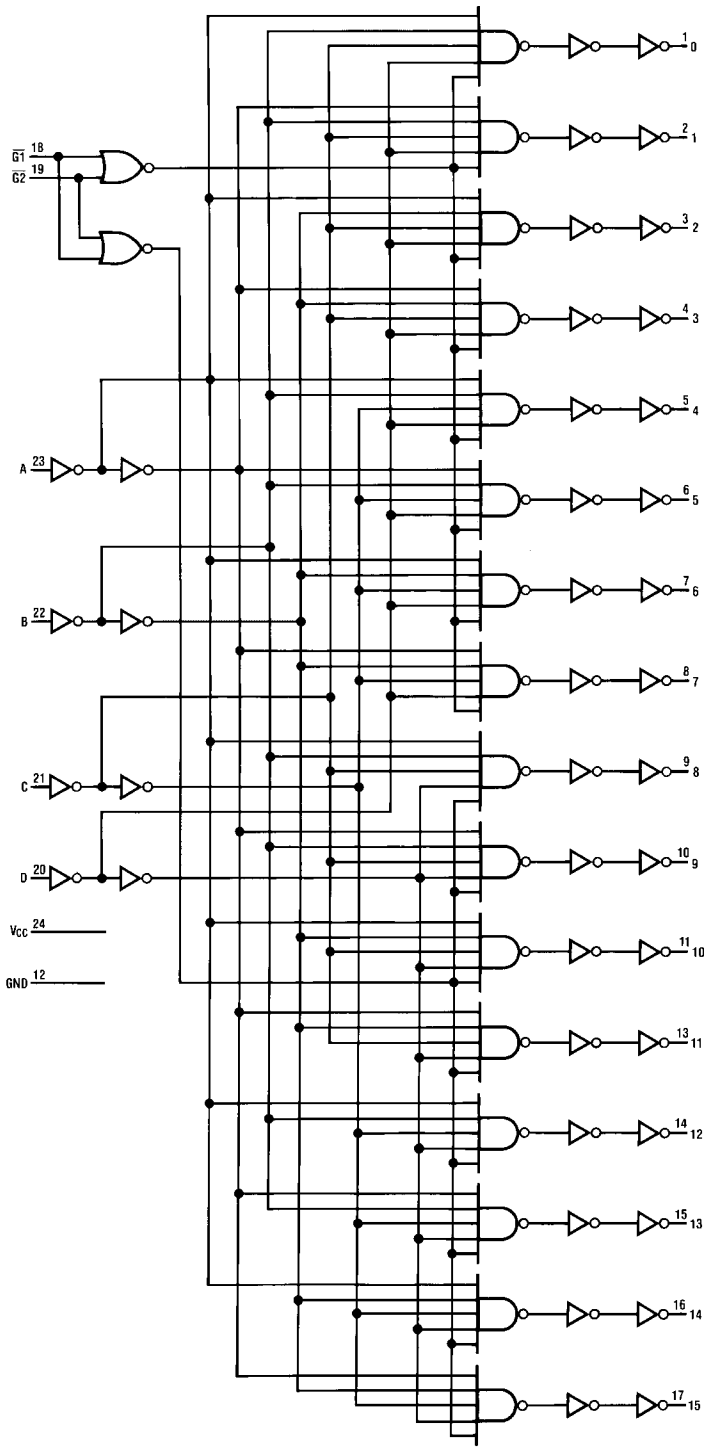

Absolute Maximum Ratings (Note 2)

(Note 3)

Supply Voltage (V_{CC})	−0.5 to +7.0V
DC Input Voltage (V_{IN})	−1.5 to V_{CC} +1.5V
DC Output Voltage (V_{OUT})	−0.5 to V_{CC} +0.5V
Clamp Diode Current (I_{IK}, I_{OK})	±20 mA
DC Output Current, per pin (I_{OUT})	±25 mA
DC V_{CC} or GND Current, per pin (I_{CC})	±50 mA
Storage Temperature Range (T_{STG})	−65°C to +150°C
Power Dissipation (P_D)	
(Note 4)	600 mW
S.O. Package only	500 mW
Lead Temperature (T_L)	
(Soldering 10 seconds)	260°C

Recommended Operating Conditions

	Min	Max	Units
Supply Voltage (V_{CC})	2	6	V
DC Input or Output Voltage (V_{IN}, V_{OUT})	0	V_{CC}	V
Operating Temperature Range (T_A)	−40	+85	°C
Input Rise or Fall Times			
(t_r, t_f) V_{CC} = 2.0V		1000	ns
V_{CC} = 4.5V		500	ns
V_{CC} = 6.0V		400	ns

Note 2: Absolute Maximum Ratings are those values beyond which damage to the device may occur.

Note 3: Unless otherwise specified all voltages are referenced to ground.

Note 4: Power Dissipation temperature derating — plastic "N" package: −12 mW/°C from 65°C to 85°C.

DC Electrical Characteristics (Note 5)

Symbol	Parameter	Conditions	V_{CC}	T_A = 25°C		T_A = −40 to 85°C	Units
				Typ	Guaranteed Limits		
V_{IH}	Minimum HIGH Level Input Voltage		2.0V		1.5	1.5	V
			4.5V		3.15	3.15	
			6.0V		4.2	4.2	
V_{IL}	Maximum LOW Level Input Voltage		2.0V		0.5	0.5	V
			4.5V		1.35	1.35	
			6.0V		1.8	1.8	
V_{OH}	Minimum HIGH Level Output Voltage	V_{IN} = V_{IH} or V_{IL} $\lvert I_{OUT}\rvert \le 20\ \mu A$	2.0V	2.0	1.9	1.9	V
			4.5V	4.5	4.4	4.4	
			6.0V	6.0	5.9	5.9	
		V_{IN} = V_{IH} or V_{IL} $\lvert I_{OUT}\rvert \le 4.0$ mA	4.5V	4.2	3.98	3.84	V
		$\lvert I_{OUT}\rvert \le 5.2$ mA	6.0V	5.7	5.48	5.34	
V_{OL}	Maximum LOW Level Output Voltage	V_{IN} = V_{IH} or V_{IL} $\lvert I_{OUT}\rvert \le 20\ \mu A$	2.0V	0	0.1	0.1	V
			4.5V	0	0.1	0.1	
			6.0V	0	0.1	0.1	
		V_{IN} = V_{IH} or V_{IL} $\lvert I_{OUT}\rvert \le 4.0$ mA	4.5V	0.2	0.26	0.33	V
		$\lvert I_{OUT}\rvert \le 5.2$ mA	6.0V	0.2	0.26	0.33	
I_{IN}	Maximum Input Current	V_{IN} = V_{CC} or GND	6.0V		±0.1	±1.0	μA
I_{CC}	Maximum Quiescent Supply Current	V_{IN} = V_{CC} or GND I_{OUT} = 0 μA	6.0V		8.0	80	μA

Note 5: For a power supply of 5V ±10% the worst case output voltages (V_{OH}, and V_{OL}) occur for HC at 4.5V. Thus the 4.5V values should be used when designing with this supply. Worst case V_{IH} and V_{IL} occur at V_{CC} = 5.5V and 4.5V respectively. (The V_{IH} value at 5.5V is 3.85V.) The worst case leakage current (I_{IN}, I_{CC}, and I_{OZ}) occur for CMOS at the higher voltage and so the 6.0V values should be used.

AC Electrical Characteristics

V_{CC} = 5V, T_A = 25°C, C_L = 15 pF, $t_r = t_f$ = 6 ns

Symbol	Parameter	Conditions	Typ	Guaranteed Limit	Units
t_{PHL}, t_{PLH}	Maximum Propagation Delay, $\overline{G1}$, $\overline{G2}$ or A, B, C, D		21	32	ns

AC Electrical Characteristics

V_{CC} = 2.0V to 6.0V, C_L = 50 pF, $t_r = t_f$ = 6 ns (unless otherwise specified)

Symbol	Parameter	Conditions	V_{CC}	T_A = 25°C		T_A = −40 to 85°C	Units
				Typ	Guaranteed Limits		
t_{PHL}, t_{PLH}	Maximum Propagation Delay, $\overline{G1}$ or $\overline{G2}$ or A, B, C, D		2.0V	63	160	190	ns
			4.5V	24	36	42	
			6.0V	20	30	35	
t_{TLH}, t_{THL}	Maximum Output Rise and Fall Time		2.0V	25	75	95	ns
			4.5V	7	15	19	
			6.0V	6	13	16	
C_{PD}	Power Dissipation Capacitance (Note 6)			90			pF
C_{IN}	Maximum Input Capacitance			5	10	10	pF

Note 6: C_{PD} determines the no load dynamic power consumption, $P_D = C_{PD} V_{CC}^2 f + I_{CC} V_{CC}$, and the no load dynamic current consumption, $I_S = C_{PD} V_{CC} f + I_{CC}$.

Physical Dimensions inches (millimeters) unless otherwise noted

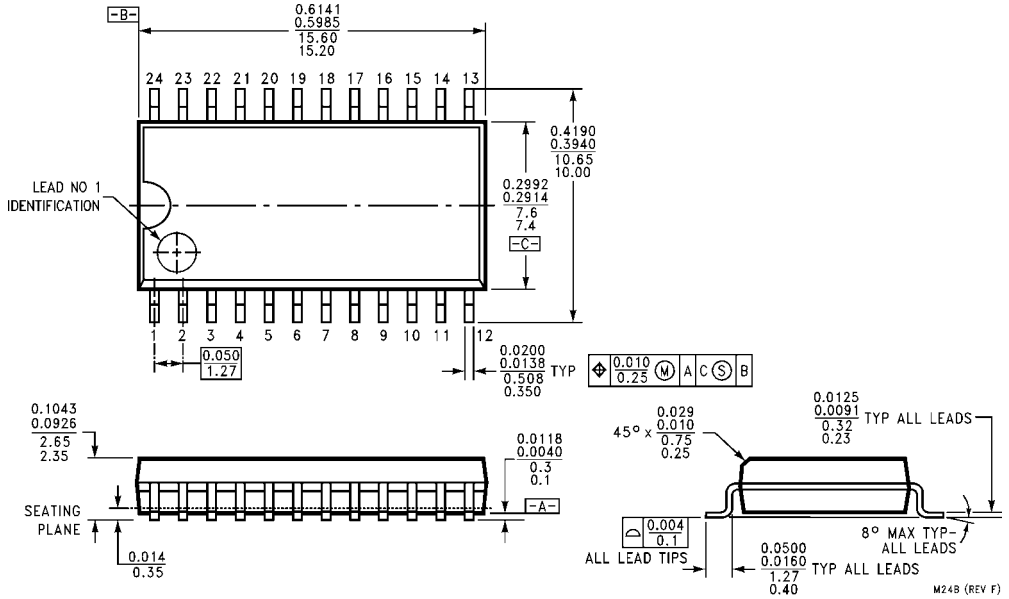

24-Lead Small Outline Integrated Circuit (SOIC), JEDEC MS-013, 0.300" Wide
Package Number M24B

Physical Dimensions inches (millimeters) unless otherwise noted (Continued)

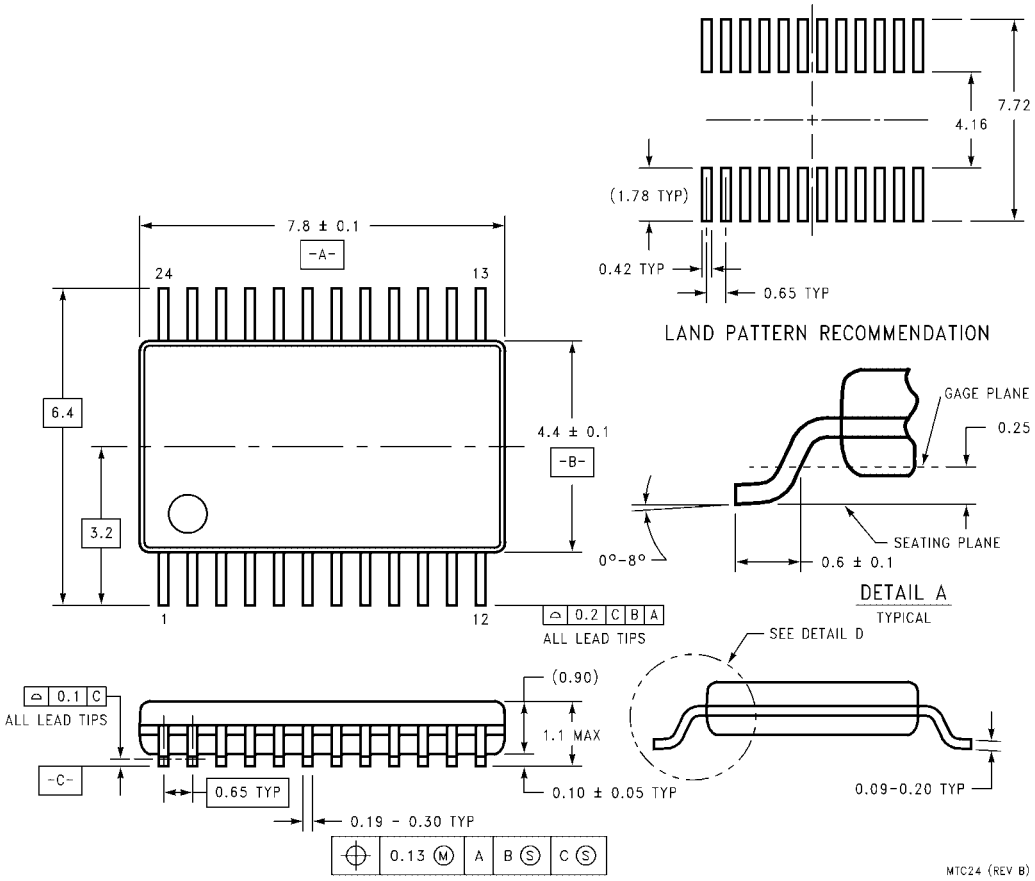

24-Lead Thin Shrink Small Outline Package (TSSOP), JEDEC MO-153, 4.4mm Wide
Package Number MTC24

Physical Dimensions inches (millimeters) unless otherwise noted (Continued)

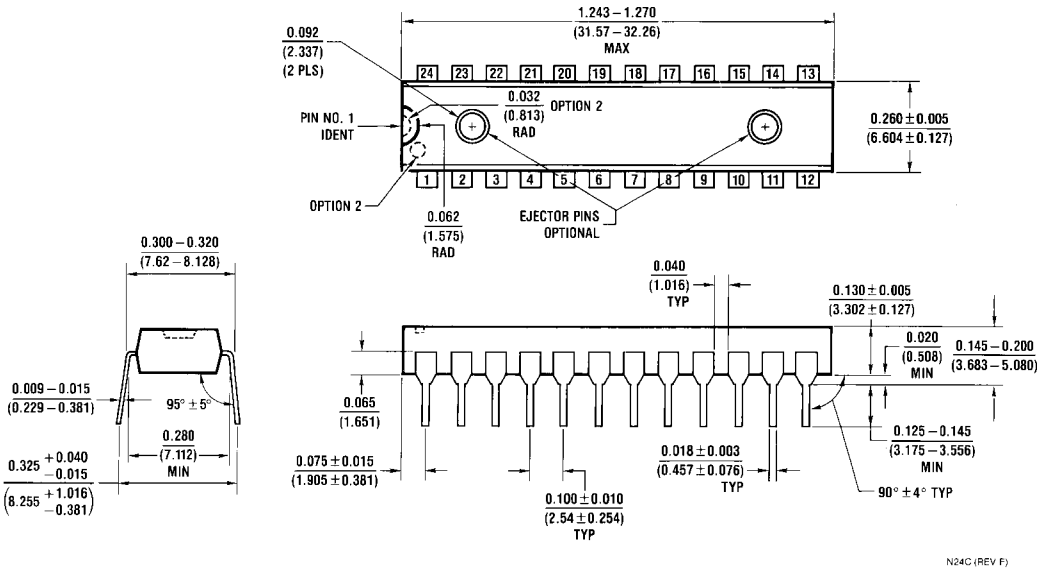

24-Lead Plastic Dual-In-Line Package (PDIP), JEDEC MS-001, 0.300" Wide
Package Number N24C

Fairchild does not assume any responsibility for use of any circuitry described, no circuit patent licenses are implied and Fairchild reserves the right at any time without notice to change said circuitry and specifications.

LIFE SUPPORT POLICY

FAIRCHILD'S PRODUCTS ARE NOT AUTHORIZED FOR USE AS CRITICAL COMPONENTS IN LIFE SUPPORT DEVICES OR SYSTEMS WITHOUT THE EXPRESS WRITTEN APPROVAL OF THE PRESIDENT OF FAIRCHILD SEMICONDUCTOR CORPORATION. As used herein:

1. Life support devices or systems are devices or systems which, (a) are intended for surgical implant into the body, or (b) support or sustain life, and (c) whose failure to perform when properly used in accordance with instructions for use provided in the labeling, can be reasonably expected to result in a significant injury to the user.
2. A critical component in any component of a life support device or system whose failure to perform can be reasonably expected to cause the failure of the life support device or system, or to affect its safety or effectiveness.

www.fairchildsemi.com