THIS DRAWING IS UNPUBLISHED. RELEASED FOR PUBLICATION -,- .
© COPYRIGHT - BY TYCO ELECTRONICS CORPORATION. ALL RIGHTS RESERVED.

LOC	DIST
HC	00

REVISIONS

P	LTR	DESCRIPTION	DATE	DWN	APVD
	B	REVISED PER 0S14-0174-03.	13AUG03	JGH	JGH

DESIGNED FOR USE WITH .085 S/R CABLE	
CABLE ENTRY DIAMETER MINIMUM	
CONTACT	.021
HOUSING	.091

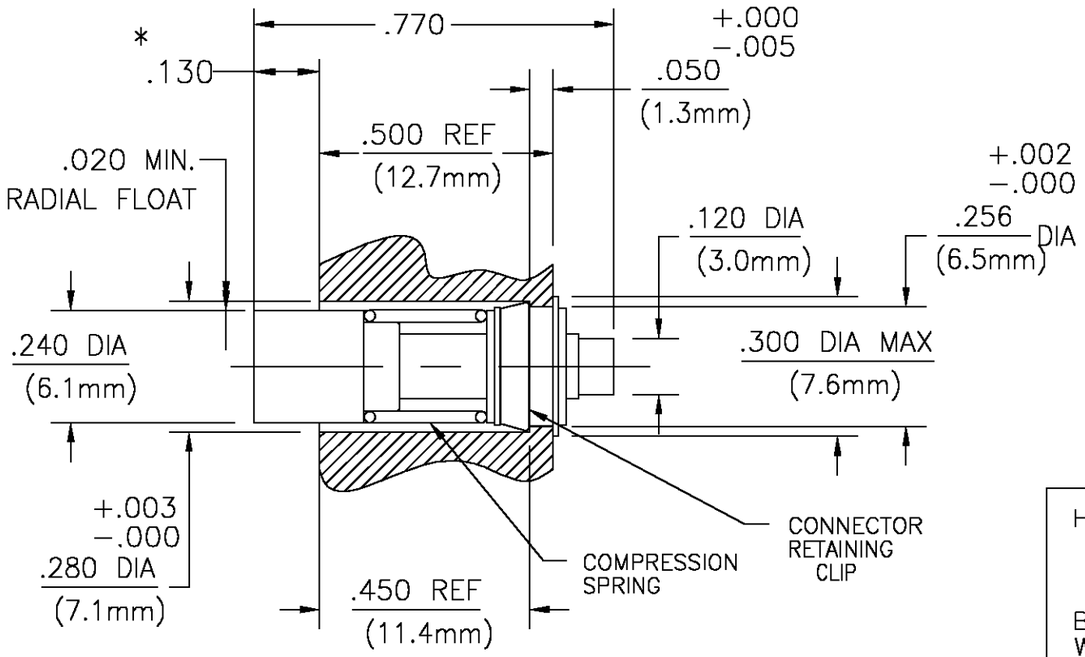

RECOMMENDED MOUNTING HOLE

* ALLOWS FOR .120 AXIAL FLOAT

COMPONENT	MATERIAL	FINISH
HOUSING	STAINLESS STEEL PER ASTM-A484 AND ASTM-A582, TYPE 303	GOLD PLATE PER MIL-G-45204 OVER NICKEL PLATE PER QQ-N-290
BUSHING WASHER	STAINLESS STEEL PER ASTM-A484 AND ASTM-A582, TYPE 303	PASSIVATE PER ASTM-A380
DIELECTRIC	TFE FLUOROCARBON PER ASTM-D-1457	N/A
CENTER CONTACT CONTACT SLEEVE	BERYLLIUM COPPER PER ASTM B 196, ALLOY C17300, CONDITION H	GOLD PLATE PER MIL-G-45204 OVER NICKEL PLATE PER QQ-N-290
RETAINING CLIP	BERYLLIUM COPPER PER ASTM B 196, ALLOY C17300, CONDITION H	GOLD PLATE PER MIL-G-45204
RETAINING RING	STAINLESS STEEL	PASSIVATED
CONTACT RING	BERYLLIUM COPPER PER ASTM B 194	GOLD PLATE PER MIL-G-45204 OVER COPPER PLATE PER MIL-C-14550
SPRING	STAINLESS STEEL	PASSIVATE PER ASTM-A380

ELECTRICAL

NOMINAL IMPEDANCE (OHMS)	50±1
Frequency Range (GHz)	DC to 28
Volt Rating (VRMS MAX) @ Sea Level	335
VSWR	1.05+.01f(GHz)
Insertion Loss (dB MAX)	$.04x\sqrt{f(GHz)}$
RF Leakage (dB MIN) (Interface Only, Fully Mated)	-(90-f(GHz))
Corona, 70,000 Ft (VRMS MIN)	250
Dielectric Withstanding Voltage (VRMS MIN) @ Sea Level	675
Contact Resistance (Milliohms MAX)	
Center Contact	6.0
Outer Contact	3.0
Cable to Housing	0.5
RF High Potential @ Sea Level (VRMS MIN @ 5 MHz)	675
I.R.(Megohms MIN)	5000

MECHANICAL

Interface Dimensions	SEE TYCO ELECTRONICS CATALOG
Mating Characteristics:	
Insertion (MAX Lbs)	2.5
Withdrawal (MIN Oz)	0.5
Force to Engage (In-Lbs MAX)	2.5
& Disengage (In-Lbs MAX)	1.5
Center Contact Captivation Axial (Lbs)	4
Cable Retention	
Axial Force (Lbs MIN)	30
Torque (In-Oz MIN)	16
Spring Rate	18.5 lbs/in
Pre-load	2.7 lbs min
Durability	5000 cycles

ENVIRONMENTAL

TEMPERATURE RATING -65° TO +105°C

Vibration MIL-STD-202, Method 204, Condition D

Shock MIL-STD-202, Method 213, Condition D

Thermal Shock MIL-STD-202, Method 107, Condition B

Moisture Resistance MIL-STD -202, Method 106

Corrosion - MIL-STD-202, Method 101, Cond B

THIS DRAWING IS A CONTROLLED DOCUMENT.

DIMENSIONS: INCHES/mm (REF)

TOLERANCES UNLESS OTHERWISE SPECIFIED:

0 PLC	± -
1 PLC	± -
2 PLC	± -
3 PLC	± .005 (0.13)
4 PLC	± -
ANGLES	± 1°

MATERIAL: SEE TABLE

FINISH: SEE TABLE

DWN	P. VACCARO	10/27/97
CHK	J. HAVENER	13AUG03
APVD	J. HAVENER	13AUG03
PRODUCT SPEC	408-4657	
APPLICATION SPEC	—	
WEIGHT	—	

tyco Electronics

Tyco Electronics Corporation
Harrisburg, PA 17105-3608

NAME: OSSP FLOATING PANEL FEEDTHRU REAR MOUNT CABLE JACK - DIRECT SOLDER ATTACHMENT (4710-5007-00)

SIZE	CAGE CODE	DRAWING NO	RESTRICTED TO
A3	00779	C-1223829-1	—

CUSTOMER DRAWING | SCALE 3:1 | SHEET 1 OF 1 | REV B

AMP 1470-19 REV 31MAR2000

H:\ECs\dmmod\