THIS DRAWING IS UNPUBLISHED
RELEASED FOR PUBLICATION MAR ,1995.
© COPYRIGHT 2010 By –
ALL RIGHTS RESERVED.

LOC	DIST
IR	—

REVISIONS

P	LTR	DESCRIPTION	DATE	DWN	APVD
	D	CONTACT MATERIAL & PLATING CHANGE	20JUN2014	PS	JK

Pos.	L -0.9
-	-
3	7.62
4	10.16
5	12.7
6	15.24
7	17.78
8	20.32
9	22.86
10	25.4
11	27.94
12	30.48
13	33.02
14	35.56
15	38.1
16	40.64
17	43.18

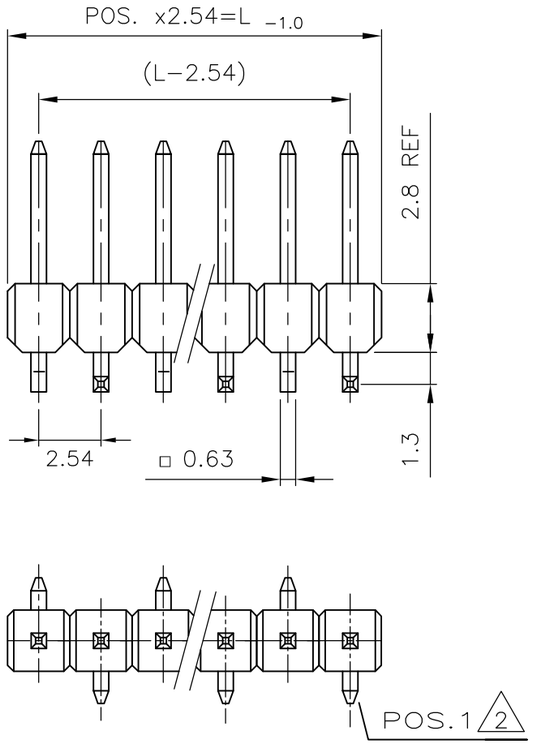

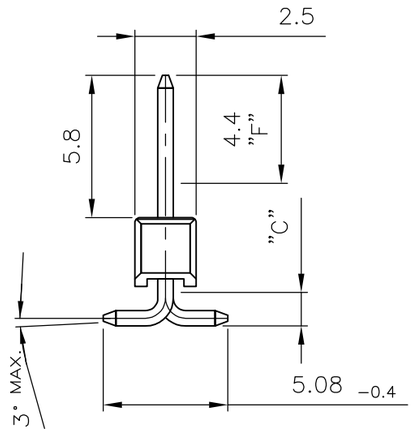

EMPFOHLENES LEITERPLATTEN LAYOUT
RECOMMENDED PCB–LAYOUT

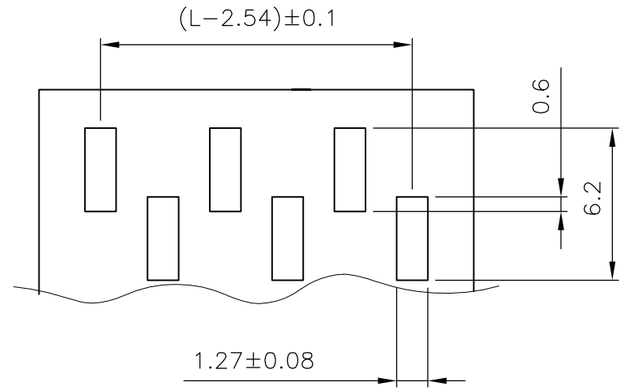

1 MATING SIDE: AREA "F" MIN 0.7µm PdNi + MIN 0.1µm GOLD FLASH OVER 1.27µm NICKEL
SOLDER SIDE: 3.0 – 5.0 µm TIN OVER 1.27µm NICKEL

2 PAY ATTENTION THE POSITION OF 1st CONTACT

KONTAKTSTIFT / CONTACT PIN	CuZn	1	2
STIFTGEHÄUSE / PIN HOUSING	PCT	SCHWARZ / BLACK	1
BENENNUNG EINZELTEIL PART DESCRIPTION	WERKSTOFF MATERIAL	OBERFLÄCHE / FARBE SURFACE / COLOR	SI No

THIS DRAWING IS A CONTROLLED DOCUMENT.

DIMENSIONS: mm

TOLERANCES UNLESS OTHERWISE SPECIFIED: TOL ± 0.2
0 PLC ± –
1 PLC ± –
2 PLC ± –
3 PLC ± –
4 PLC ± –
ANGLES ± –

MATERIAL: SEE TABLE
FINISH: SEE TABLE

DWN A.HO 24.03.95
CHK M.SCHAARSCHMIDT 24.03.95
APVD —
PRODUCT SPEC 108–18012
APPLICATION SPEC —
WEIGHT —

TE Connectivity

NAME: AMPMODU II PINHEADER, SINGLE ROW, SMD–WITH PACKING TUBE.

SIZE	CAGE CODE	DRAWING NO	RESTRICTED TO
A3	00779	C-966306	—

CUSTOMER DRAWING | SCALE 2:1 | SHEET 1 OF 2 | REV D

THIS DRAWING IS UNPUBLISHED. RELEASED FOR PUBLICATION MAR ,1995.
© COPYRIGHT 2010 By – ALL RIGHTS RESERVED.

LOC	DIST
IR	—

REVISIONS

P	LTR	DESCRIPTION	DATE	DWN	APVD
	–	SEE SHEET 1	–	–	–

SECTION A–A
SCHNITT A–A

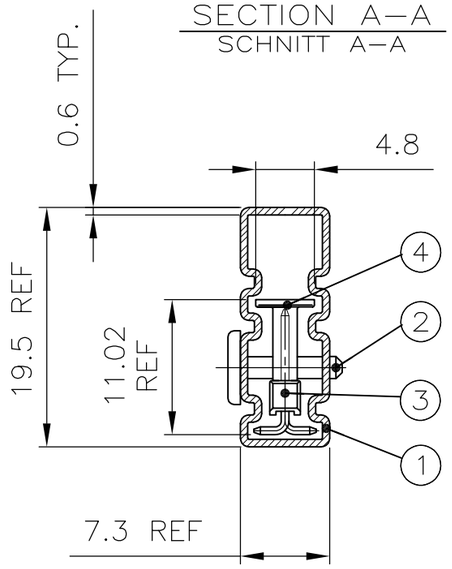

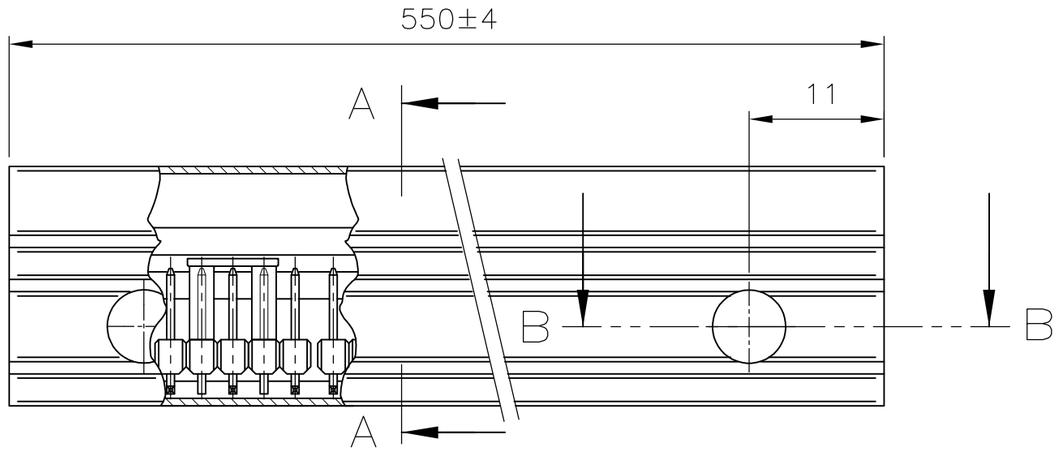

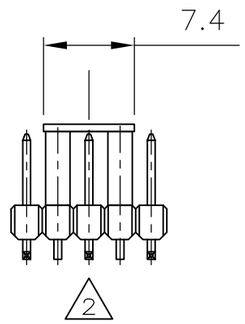

ODD NUMBER OF POSITION
UNGERADE POLZAHL

SECTION B–B
SCHNITT B–B

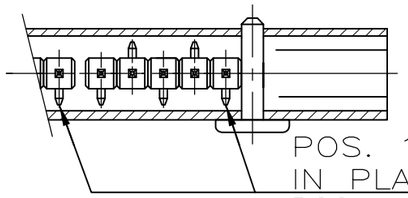

POS. 1 OF PIN HEADER
IN PLACE 5 POS. SHOWN
POS. 1 DER STIFTLEISTE
HIER 5 POL. GEZEICHNET

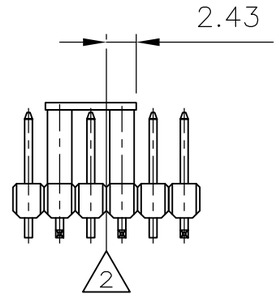

EVEN NUMBER OF POSITION
GERADE POLZAHL

POSITION IN TUBE
Lage in Verpackungsröhre

5 OBSOLETE

4 OBSOLETE PARTS: OBSOLETE CIS
STREAMLINING PER D.RENAUD/D.SINISI

3 SEE TABLE
SIEHE TABELLE

2 CENTERLINE OF PIN HEADER
MITTELLINIE DER STIFTLEISTE

1 AMPMODU II SMD–PIN HEADER
SEE SHEET 1 OF 2.
AMPMODU II SMD–STIFTLEISTE
SIEHE BLATT 1 VON 2.

ORDER-NR	POS.	STÜCK / PIECE	BENENNUNG EINZELTEIL PART DESCRIPTION	WERKSTOFF MATERIAL	OBERFLÄCHE / FARBE SURFACE / COLOR	SI No
S.TABELLE SEE TABLE	4	3	ADAPTER	PCT-GV	SCHWARZ / BLACK	4
	3	3	AMPMODU II STIFTL., SMD	1	1	3
	2	2	VERSCHL. STIFT / LOCKS PIN	PP	ROT / RED	2
	1	1	VERPACKUNGSROHR / PACKING PIPE	ANTI-STATISCH	TRANSPARENT	1

BESTELL-NR. PART NO.	POLZ. PROREIHE POLZ. PER ROW	VERPACKUNGS-EINHEIT PACKING UNIT	
1-966 306-2	12	17	
1-966 306-0	10	20	
~~966 306-9~~	9	23	OBSOLETE 4
966 306-8	8	25	
4 ~~966 306-7~~	7	29	
966 306-6	6	34	
5 ~~966 306-5~~	5	41	
966 306-4	4	51	
966 306-3	3	69	

THIS DRAWING IS A CONTROLLED DOCUMENT.

DIMENSIONS: mm

TOLERANCES UNLESS OTHERWISE SPECIFIED: TOL ± 0.2
0 PLC ± –
1 PLC ± –
2 PLC ± –
3 PLC ± –
4 PLC ± –
ANGLES ± –

MATERIAL: SEE TABLE
FINISH: SEE TABLE

DWN A.HO 24.03.95
CHK M.SCHAARSCHMIDT 24.03.95
APVD –
PRODUCT SPEC 108–18012
APPLICATION SPEC –
WEIGHT –

TE Connectivity

NAME: AMPMODU II PINHEADER, SINGLE ROW, SMD–WITH PACKING TUBE.

SIZE	CAGE CODE	DRAWING NO	RESTRICTED TO
A3	00779	C–966306	–

CUSTOMER DRAWING | SCALE 2:1 | SHEET 2 OF 2 | REV D

1470–19 (3/11)