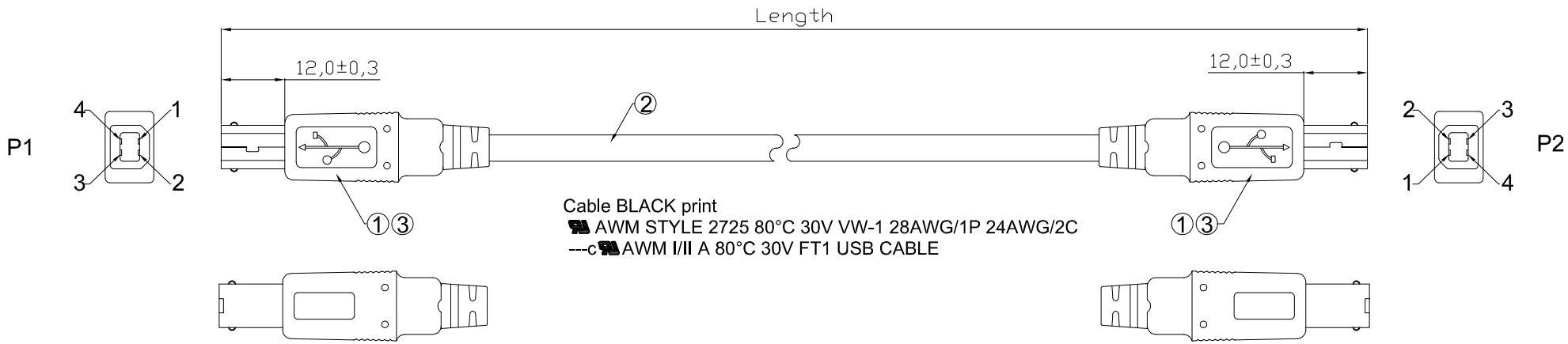

Cable BLACK print
AWM STYLE 2725 80°C 30V VW-1 28AWG/1P 24AWG/2C
---c AWM I/II A 80°C 30V FT1 USB CABLE

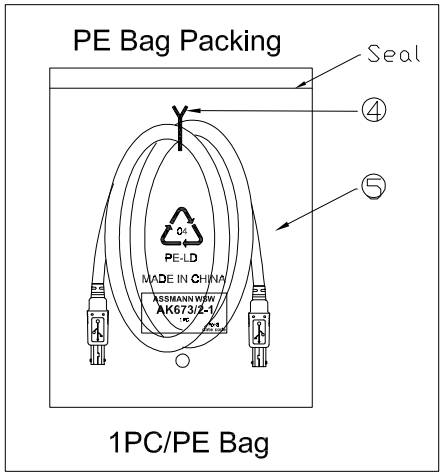

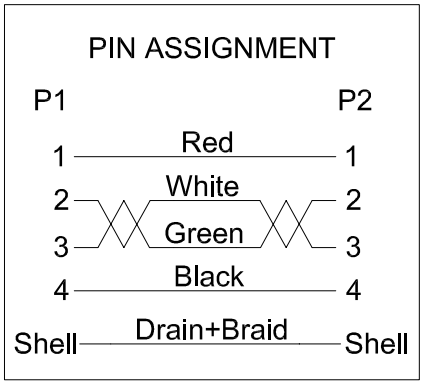

WSW P/N	Jacket color	Length(mm)
AK673/2-1	Beige	1000±30
AK673/2-2	Beige	2000±50
AK673/2-3	Beige	3000±50
AK673/2-5	Beige	5000±50

Electrical test:
1. 100% short, open, miss wire test
2. Conduct resistance: 2 Ohm max.
3. Insulator resistance: 10Mohm min.
4. Dielectric test: DC 300V

NO.	NAME.	Q'TY	SPECIFICATION
⑤	PE Bag	1	Clear Print black "MADE IN CHINA"+ "1PC"
④	TIE	1	White
③	Out Jacket	NA	Beige(BG002) PVC-45P
②	Cable	1	USB2.0 UL2725 28#/1P+24#/2C+AEB OD:4.7mm Beige(BG002)
①	CONN	2	USB 2.0 B Male Shell:Nickel Pin:G/F Insulator color: White

RoHS compliant
Unit: mm

Scale	Free
TOLERANCE	
DIM	TOL
Angle	TOL

Id.	Modification	Date	Name
⓪	Drawn	12.04.2016	Amy

	Date	Name
Drawn	12.04.2016	Amy
Approved	12.04.2016	Amy

ASSMANN wsw components

Customer-No.

ASSMANN WSW-No. AK673/2-x

Drawing-No. ASS 7607 CA

rev00

Replace

Sheet