REVISIONS					
REV	ECO	DESCRIPTION	DATE	BY	APPR
B1	-	RELEASE NEW DWG FORMAT	06/16/14	TOD	TOMMY

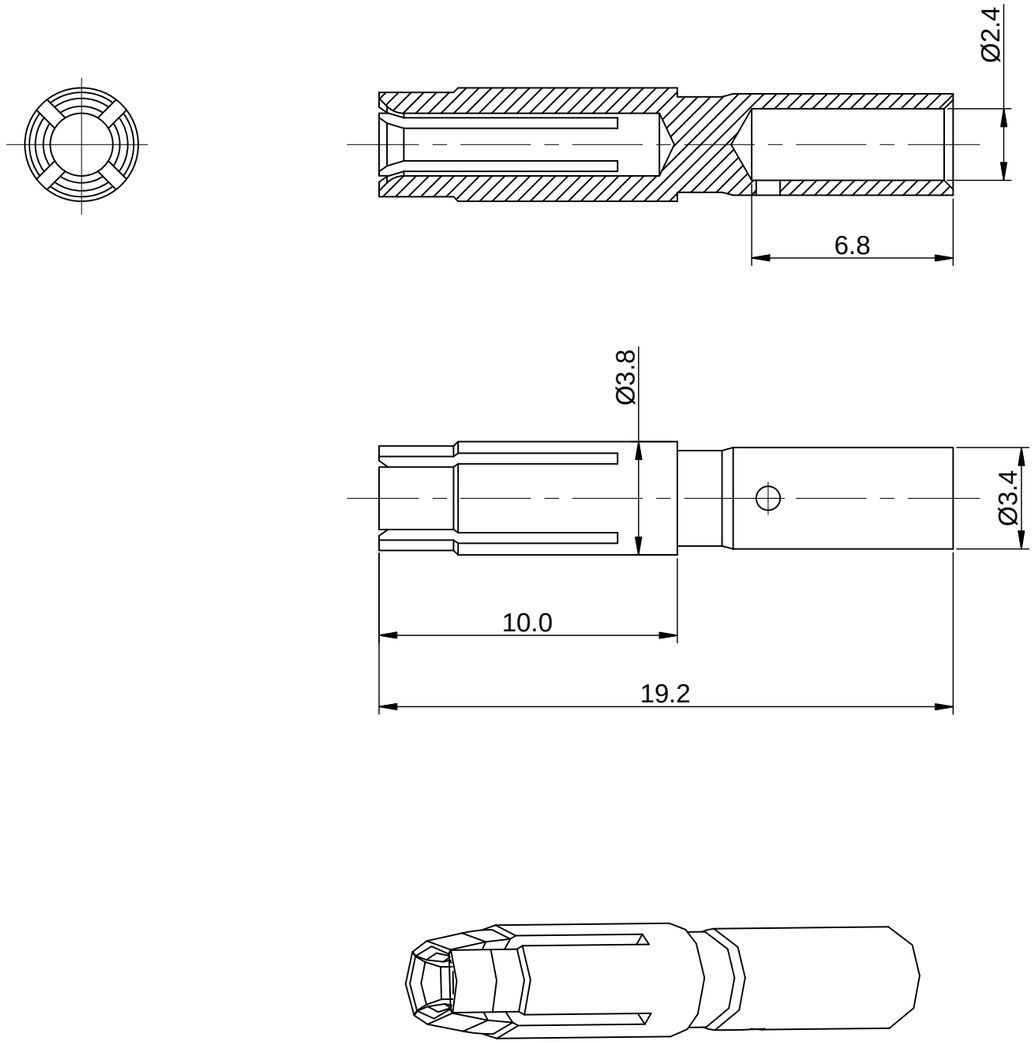

NOTES: UNLESS OTHERWISE SPECIFIED

1. MATERIAL: COPPER ALLOY, GOLD PLATED

2. SPECIFICATIONS:
   2.1 RATED CURRENT: 30 AMPS
   2.2 CONTACT RESISTANCE: <3 milliohm
   2.3 AVAILABLE WIRE RANGE: 18AWG~14AWG
   2.4 RoHS COMPLIANT

3. ALL DIMENSIONS ARE FOR REFERENCE USE ONLY.

QUANTITY	PART NUMBER	DESCRIPTION	ITEM
	~~SEE PART NUMBER CHART~~		

MATERIALS LIST

UNLESS OTHERWISE SPECIFIED
1) All dimensions are in metric(mm).
2) Tolerances are as follows:
1 PL DEC ±0.30 | Fractions ±1/64
2 PL DEC ±0.15 | Angles ±1°
3 PL DEC ±0.08
3) Note reference = X

MATERIAL SPECIFICATIONS:

PROCESS SPECIFICATIONS:

NEXT ASS'Y:

SIGNATURES		DATE
DRAWN:	Tod	06/16/14
CHECKED:		
ENGINEER:		
APPROVAL:		
CUSTOMER:		

THIS DRAWING IS SUPPLIED FOR INFORMATION ONLY. DESIGN FEATURES, SPECIFICATIONS AND PERFORMANCE DATA SHOWN HEREON ARE THE PROPERTY OF THE AMPHENOL CORPORATION. NO RIGHTS OF REPRODUCTION ARE IMPLIED. ALL DIMENSIONS ARE SUBJECT TO NORMAL MANUFACTURING VARIATIONS.

Amphenol
Sine Systems - www.amphenol-sine.com
44724 Morley Drive
Clinton Township, MI 48036

Socket,Machined,14#,Crimp 18~14AWG

SIZE	TYPE	DWG NO:	REVISION
B	C-	SC000045	B1

SCALE: NONE

SHEET 1 OF 1

TITLE: Socket,Machined,14#,Crimp 18~14AWG
DWG NO: SC000045
REV: B1
SH: 1
OF: 1