PART NUMBER	ENGINEERING NUMBER	FINISH LENGTH
1300060088	102000A01F030	3.00′ +1.75″ -0 [.9M +44.5 -0]
1300060091	102000A01F060	6.00′ +3.50″ -0 [1.8M +88.9 -0]
1300060096	102000A01F120	12.00′ +6.50″ -0 [3.7M +165.1 -0]
1300060099	102000A01F150	15.00′ +6.50″ -0 [4.6M +165.1 -0]
1300060102	102000A01F200	20.00′ +6.50″ -0 [6.1M +165.1 -0]
1300060105	10200A01F250	25.00′ +12.50″ -0 [7.6M +317.5 -0]
1300060108	102000A01F300	30.00′ +12.50″ -0 [9.1M +317.5 -0]
1300060111	102000A01F400	40.00′ +12.50″ -0 [12.2M +317.5 -0]
1300060112	102000A01F500	50.00′ +24.50″ -0 [15.2M +622.3 -0]

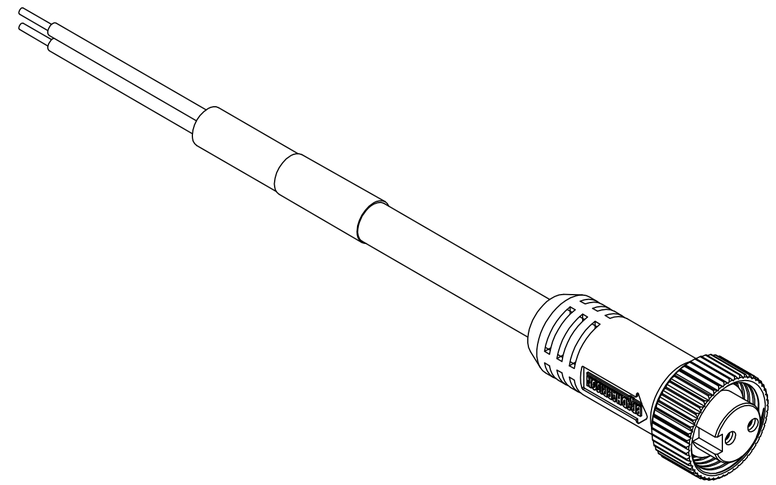

NOTE

1) MATERIAL: SEE TABLE
2) FINISHES: SEE TABLE
3) WRAP LABEL IS MARKED WITH P/N, DATE CODE, VOLTAGE & AMPERAGE
4) MATES WITH: MINI CHANGE, 2 POLE RECEPTACLE
5) ELECTRICAL DATA:
   INLINE CORDSET
   FEMALE A-SIZE WITH FLYING LEADS
   16AWG UNSHIELDED
   POLES: 2
   MAX. VOLTAGE: 600V
   MAX. CURRENT 13A
   PROTECTION IP67
   TEMPERATURE RANGE: -20°C TO 105°C
6) PACKAGING:
   CABLE ASSEMBLIES ARE BAGGED SEPERATELY IN POLY BAGS WITH BAR CODE LABEL ATTACHED TO OUTSIDE OF BAG.
7)ASSEMBLY IS RoHS COMPLIANT.
8)CERTIFICATION
   UL RECOGNIZED, FILE NO. E152210
   CSA CERTIFIED, FILE NO. LR6837

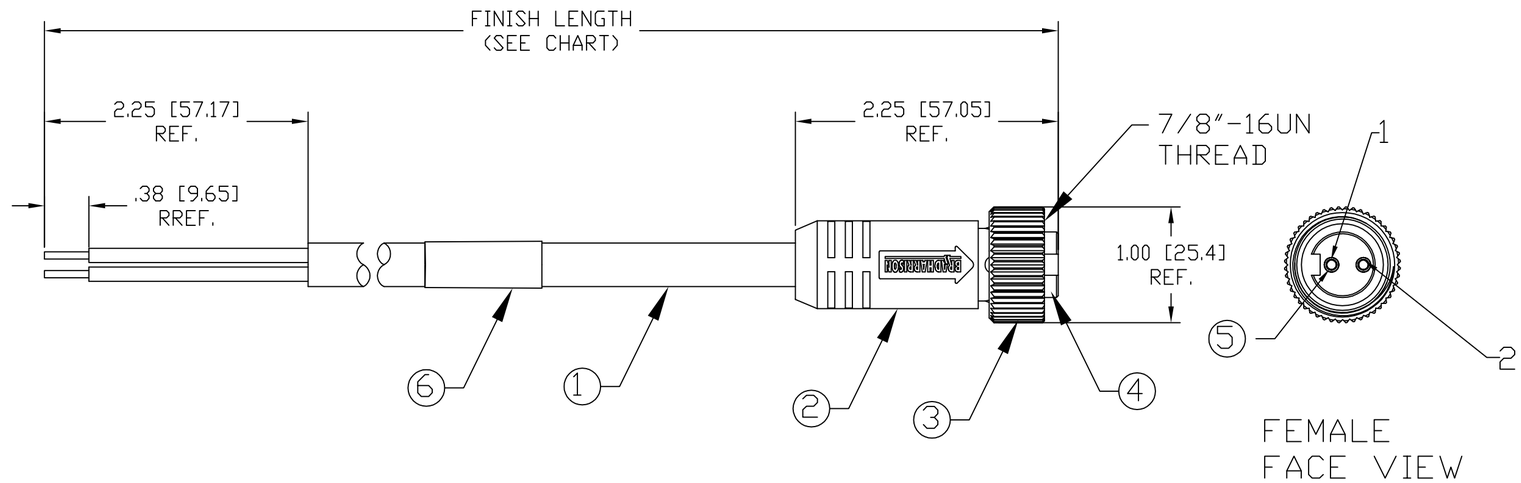

P1

1	WHITE
2	BLACK

WIRING DIAGRAM

ITEM	QTY.	DESCRIPTION	MATERIAL	FINISH
6	1	LABEL	PLASTIC FILM	BLACK/YELLOW
5	2	CONTACT SOCKET	COPPER ALLOY	GOLD PLATED
4	1	INSERT	PVC	YELLOW
3	1	COUPLING NUT	ZINC DIE CAST	BLACKE-COATED
2	1	OVERMOLD	PVC	YELLOW
1	1	CABLE, 16AWG-2 TYPE STOOW	PVC	YELLOW

RELEASE
EC NO: WNA2010-0025 7/9/09
DRWN: TWOLDEGE —
CH'KD: BWOODMAN
APPR: JFMURPHY 2009/08/10
DESCRIPTION
REV A

QUALITY SYMBOL
▼=0
(C)=0

GENERAL TOLERANCES (UNLESS SPECIFIED)

	mm	INCH
4 PLACES	±----	±---
3 PLACES	±.005	±.005
2 PLACES	±.013	±.010
1 PLACE	±.025	±.020
ANGULAR ±1/2°		

DRAFT WHERE APPLICABLE MUST REMAIN WITHIN DIMENSIONS

DIMENSION STYLE: IN/MM
SCALE: 1:1
DESIGN UNITS: INCH
THIRD ANGLE PROJECTION

DRAWN BY: TWOLDEGE DATE: 2009/07/09
CHECKED BY: BWOODMAN DATE: 2009/07/09
APPROVED BY: ---- DATE: ----
MATERIAL NO.: SEE CHART

TITLE: MINI CHANGE ASSEMBLY 2-POLE FEMALE ST 16/2AWG PVC

molex MOLEX INCORPORATED

DOCUMENT NO.: SD-130006-007
SHEET NO.: 1 0F 1

SIZE: C

THIS DRAWING CONTAINS INFORMATION THAT IS PROPRIETARY TO MOLEX INCORPORATED AND SHOULD NOT BE USED WITHOUT WRITTEN PERMISSION