Product Datasheet

HBL3032PL-- Industrial Series Switch

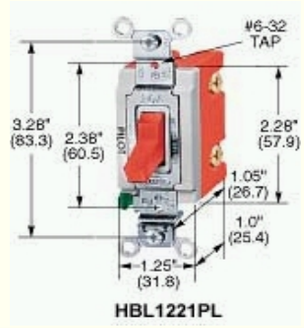

Double Pole, 30A 120/277V AC, Pilot Red T

Product Specifications	
Product Type	Toggle Switches
Switch Type	Pilot Double Pole
Switch Handle Positio	2
Switch Grade	Industrial
Amperage	30A
Voltage	120/277V AC
Color	Red
Wiring Style	Back and Side Wired
Operating Temperatur	Max Continuous 75 Degrees C, Minimum -40 Without Impa
Listing and Certificatic	UL Listed and CSA Certified
Weight in LBs	0.2
UPC Number	783585434605

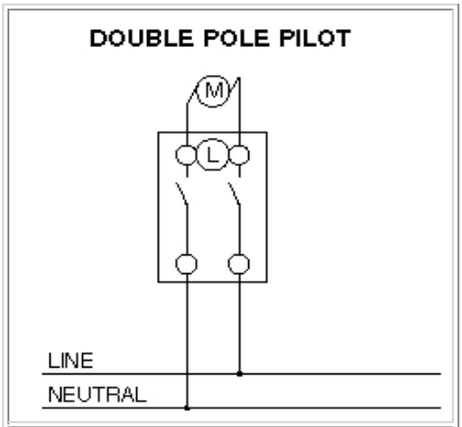

Wiring Diagram