PART NUMBER	POSITION 1	POSITION 2	POSITION 3
564-0140-101F	RED	** BLANK **	RED
564-0140-102F	RED	** BLANK **	GREEN
564-0140-111F	RED	RED	RED
564-0140-121F	RED	GREEN	RED
564-0140-132F	RED	YELLOW	GREEN
564-0140-172F	RED	ORANGE	GREEN
564-0140-200F	GREEN	** BLANK **	** BLANK **
564-0140-202F	GREEN	** BLANK **	GREEN
564-0140-207F	GREEN	** BLANK **	ORANGE
564-0140-217F	GREEN	RED	ORANGE
564-0140-221F	GREEN	GREEN	RED
564-0140-222F	GREEN	GREEN	GREEN
564-0140-303F	YELLOW	** BLANK **	YELLOW
564-0140-321F	YELLOW	GREEN	RED
564-0140-772F	ORANGE	ORANGE	GREEN
564-0140-777F	ORANGE	ORANGE	ORANGE
564-0140-213F	GREEN	RED	YELLOW
564-0140-233F	GREEN	YELLOW	YELLOW

OPERATING CHARACTERISTICS AT 25°C AMBIENT						
CHARACTERISTICS	COLOR	MIN	TYP	MAX	UNITS	TEST CONDITIONS
LUMINOUS INTENSITY	RED	7.4	10.0		mcd	I F = 10 mA
	GREEN	4.7	12.6			
	YELLOW	7.4	10.0			
	ORANGE	3.4	7.0			
FORWARD VOLTAGE	RED		2.0	2.8	V	I F = 20 mA
	GREEN		2.1	2.8		
	YELLOW		2.1	2.8		
	ORANGE	1.5	2.2	3.0		I F = 10 mA
REVERSE CURRENT	R-G-Y-O			100	µA	V R = 5 V
PEAK WAVELENGTH	RED		635		nm	
	GREEN		565			
	YELLOW		585			
	ORANGE		600			
VIEWING ANGLE	R-G-Y-O	60			Degree	

REV.	ECN NO.	REVISIONS	DRN.	CKD.	APP.	DATE
A	———	NEW RELEASE	TWC			

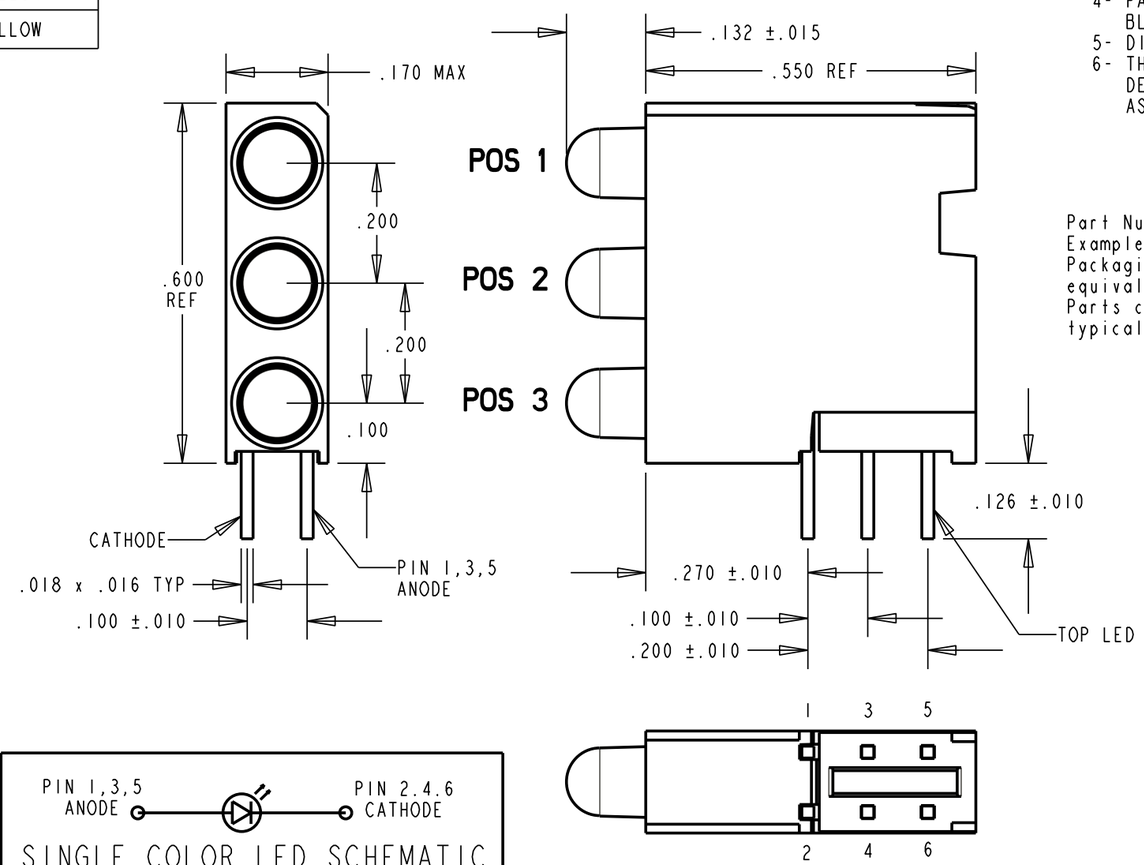

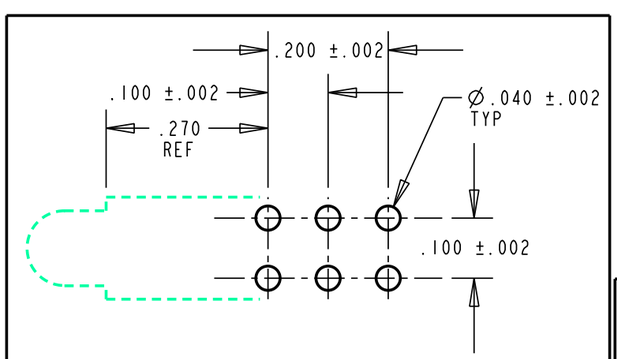

RECOMMENDED HOLE PATTERN

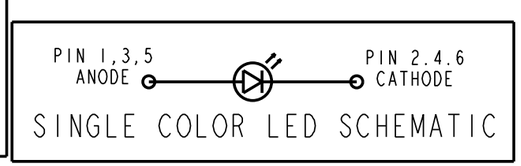

SINGLE COLOR LED SCHEMATIC

NOTES:

1- LEADS TO FIT INTO HOLES SPACED AS PER HOLE PATTERN
2- LEADS TO BE FREE OF DEFORMATION AFTER BENDING AND CUTTING
3- LED LEAD DIMENSIONS SHOWN ARE MEASURED AT HOUSING EXIT
4- PACKAGING =
BLOCKS TO BE PLACED IN CLEAR ANTISTATIC BAGS
5- DIALIGHT PART NUMBER = 564-0140-XXXF
6- THIS ASSEMBLY CONTAINS ELECTROSTATIC DISCHARGE SENSITIVE DEVICES (ESDS). MAINTAIN ALL PRECAUTIONARY MEASURES DURING ASSEMBLY, HANDLING AND STORAGE IN ACCORDANCE WITH IPC-A-610.

RoHS Compliant 564-0140-XXXF

Part Numbers with the "F" suffix ending are RoHS Compliant.
Example: 564-0140-202F
Packaging is marked with "RoHS Compliant" label or equivalent markings.
Parts can be wave soldered, dip soldered or hand soldered using typical lead-free soldering process with max 260°C temp. for 5 sec.

ATTENTION:
OBSERVE PRECAUTIONS FOR HANDLING ELECTROSTATIC SENSITIVE DEVICES

THIS DRAWING AND THE CONTENTS HEREIN ARE CONFIDENTIAL AND THE SOLE PROPERTY OF DIALIGHT. REPRODUCTION OF THIS DRAWING OR CONSTRUCTION OF ANY PARTS WITHIN THIS DRAWING ARE FORBIDDEN WITHOUT THE WRITTEN CONSENT OF DIALIGHT.

SCALE: 4.000	DRAWING NUMBER C-17364	REV A
ALL DIM'S IN: INCHES (MM)		
TOLERANCES: UNLESS OTHERWISE SPECIFIED FRACTIONS: ±1/64 DECIMALS (.XX): ±.01 DECIMALS (.XXX): ±.005 DECIMALS (.XXXX): ±.0005 ANGLES: ±1°	TITLE 3mm CBI BLOCK - HIGH EFF. RoHS COMPLIANT	
	MATERIAL N/A	
FINISH: N/A	Dialight	1501 ROUTE 34 SOUTH FARMINGDALE, NJ 07727
FSCM 83330	SHEET 1 OF 1	FAMILY TABLE: