THIS DRAWING IS UNPUBLISHED. RELEASED FOR PUBLICATION 2014
© COPYRIGHT 2014 BY TE CONNECTIVITY ALL RIGHTS RESERVED.

LOC	DIST
-	-

REVISIONS

P	LTR	DESCRIPTION	DATE	DWN	APVD
	B2	REVISED PER PCN E-20-000705	27JAN2020	PK	DM
	B3	REVISEN PER PCN E-20-018145	28DEC2020	CO	IG
	C	REVISED PER PCN-24-219560	02SEP2024	CO	CB
	D	REVISED PER PCN-25-233530	16DEC2024	RK	CB

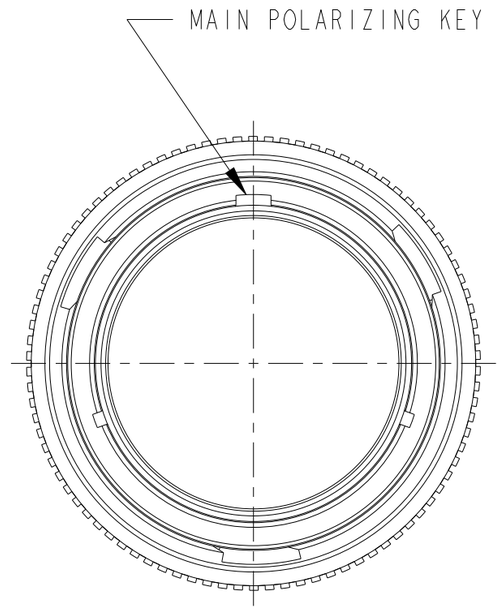

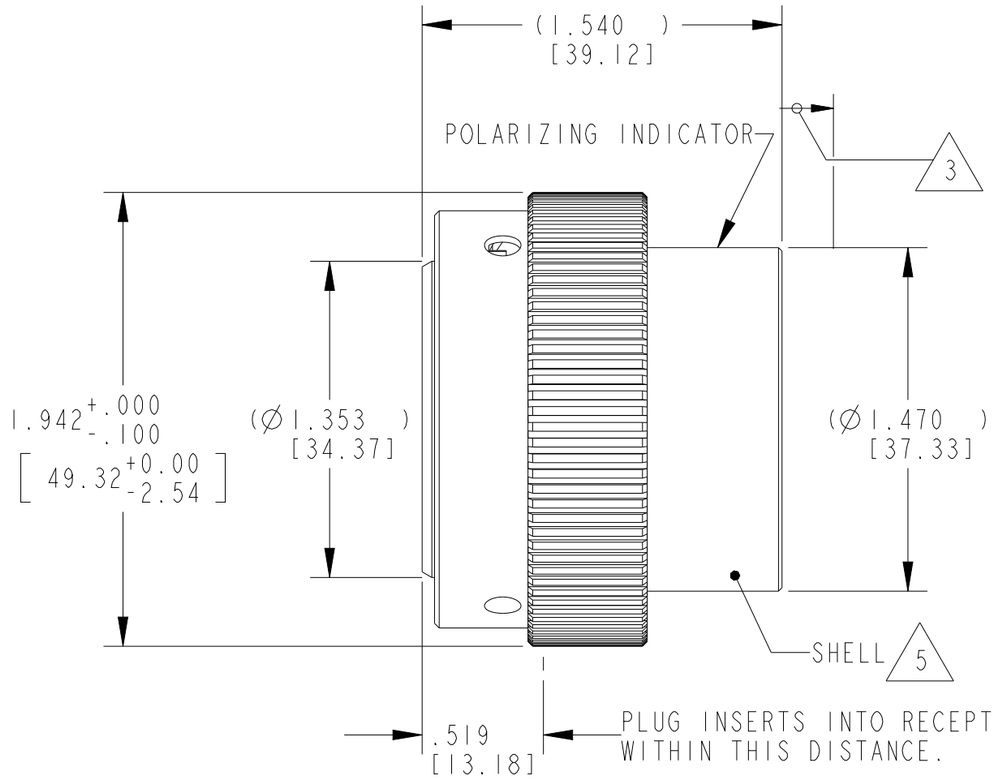

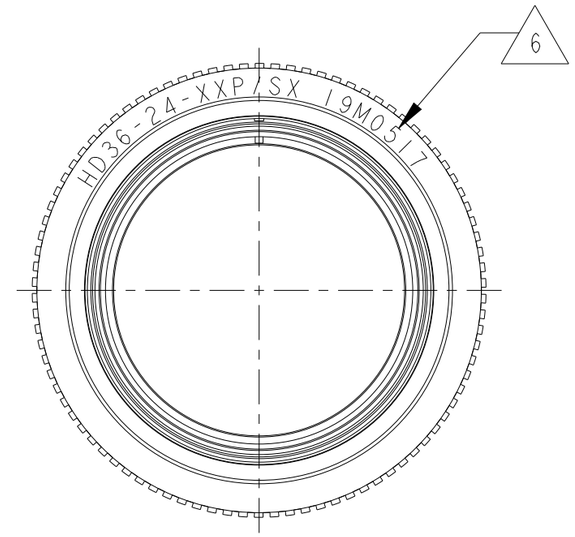

6 DATE CODE: IDENTIFIES THE YEAR,MONTH,DAY AND HOUR OF ASSEMBLY.
YEAR: FIRST AND SECOND DIGITS. (14=2014)
MONTH: THIRD DIGIT,EXCLUDING1.A=JAN.,B=FEB.,C=MARCH...(K=OCT.)
DAY: FOURTH AND FIFTH DIGITS (14=14th DAY)
HOUR: SIXTH AND SEVENTH DIGITS (11=11AM)

5 MATERIAL:
PLUG HOUSING: 6061-T6 ALUMINIUM ALLOY,
GROMMET: SILICONE VMQ (RED),
RETAINER RING:PA66 GF10

4. THIS SHELL MATES WITH HD34-24-XXP/SX-XXXX

3. TOTAL DIM. WITH EXTENDED WIRE SEAL (WITH CONTACTS #4 OR #8 ONLY) = 1.750±.050 [44.45±1.27].

2. SEE DRAWING 0425-014-2400 FOR ARRANGEMENT OF CONTACT LOCATION.

1. CONSULT THE FACTORY FOR ELECTRICAL AND MATERIAL SPECIFICATIONS.

NOTES:

THIS DRAWING IS A CONTROLLED DOCUMENT.

DIMENSIONS: INCHES[mm]

TOLERANCES UNLESS OTHERWISE SPECIFIED:

0 PLC	±-
1 PLC	±-
2 PLC	±-
3 PLC	±.010 [±.254]
4 PLC	±-
ANGLES	±0° 30′0″

MATERIAL 5

FINISH -

DWN	VIJETH BHARADWAJ	30OCT2014
CHK	I. GRANTCHAROVA	31OCT2014
APVD	D. MEYER	31OCT2014
PRODUCT SPEC	108-151014	
APPLICATION SPEC	114-151014	
WEIGHT	64g	

TE Connectivity

NAME PLUG CONNECTOR, SHELL SIZE 24
BAYONET COUPLING
HD30 SERIES

SIZE	CAGE CODE	DRAWING NO	RESTRICTED TO
A3	-	C-HD36-24-XXP/SX	-

Customer Drawing | SCALE NONE | SHEET 1 OF 1 | REV D

1470-19 (3/11)