MODULAR JACK CHARACTERISTICS LEGEND
EXTERNAL CONNECTOR BODY DIMENSIONS: (SEE NOTES 8 AND 9) JACKS ARE AVAILABLE IN STANDARD 4, 6, AND 8 POSITION BODY SIZES
NUMBER OF CONTACT POSITIONS: CONNECTOR SIZE 4 CAN ACCOMMODATE 2 OR 4 TERMINALS, CONNECTOR SIZE 6 CAN ACCOMMODATE 2, 4, OR 6 TERMINALS, CONNECTOR SIZE 8 CAN ACCOMMODATE 2, 4, 6, 8, OR 10 TERMINALS
POLARIZATION OPTION: "NO"= JACKS WITHOUT KEYING SLOT "YES"= JACKS WITH KEYING SLOT (AVAILABLE ON CONNECTOR SIZE 8 ONLY)
MOUNTING EARS OPTION: "YES"= JACKS WITH MOUNTING EARS "NO"= JACKS WITHOUT MOUNTING EARS

NOTES:
1) MATERIALS: HOUSING- POLYESTER, GLASS FILLED, UL94V-0, COLOR - BLACK
TERMINALS- PHOSPHOR BRONZE ALLOY, .015/(0.38) THICK.
2) TERMINAL PLATING:
SELECT GOLD IN CONTACT AREA: 50 MICROINCHES MIN.,
*SELECT TIN IN PC TAIL AREA: 100 MICROINCHES MIN.,
WITH OVERALL NICKEL UNDERPLATE: 50 MICROINCHES MIN.
*THE PRIMARY SHIPPING CARTON WILL BE LABELED "COMPLIANT TO RoHS DIRECTIVE 2002/95/EC AND ELV ANNEX II OF DIRECTIVE 2000/53/EC". CARTONS WITHOUT THIS LABEL MAY CONTAIN PRODUCT WITH TIN-LEAD IN THE PC TAIL.
3) THESE MODULAR JACKS MEET THE PERFORMANCE REQUIREMENTS OF MOLEX PRODUCT SPECIFICATION PS-42878.
4) CONNECTORS ARE SHIPPED IN THERMOFORMED TRAYS, PER PACKAGING SPECIFICATION PK-42878-492.
5) ALL JACKS ARE DESIGNED TO BE USED WITH .062/(1.57) OR .125/(3.18) THICK P.C. BOARDS.
6) ALL JACKS CONFORM TO AND ACCEPT PLUGS WHICH CONFORM TO FCC RULES AND REGULATIONS PART 68, SUBPART F.
7) ALL JACKS MUST BE CAPABLE OF FITTING INTO MOLEX GAGE G-42410 (CONNECTOR SIZE 8).
8) SEE SHEETS 1 & 4 FOR CONNECTOR SIZE 4.
9) SEE SHEETS 2 & 4 FOR CONNECTOR SIZE 6.
10) ENGRAVED NUMBERS ON HOUSING BODY ARE FOR MOLDING IDENTIFICATON ONLY, THEY ARE NOT INTENDED FOR ASSEMBLY IDENTIFICATION PURPOSES.
11) THIS PART CONFORMS TO CLASS B REQUIREMENTS OF COSMETIC SPECIFICATION PS-45499-002 WITH THE EXCEPTION OF THE SINK WHICH CONFORMS TO CLASS C REQUIRMENTS.

P.C. BOARD THICKNESS	DIM. "D" (MTG. PEGS)	DIM. "F" (P.C. TAILS)
.062/(1.57)	.128 (3.25)	.120 +.015/-.025 (3.05 +.38/-.63)
.125/(3.18)	.191 (4.85)	.205 +.015/-.025 (5.21 +.38/-.63)

CONNECTOR SIZE	CIRCUIT SIZE	DIM. "G"
8	10	.450 (11.43)
8	8	.350 (8.89)
8	6	.250 (6.35)
8	4	.150 (3.81)
8	2	.050 (1.27)

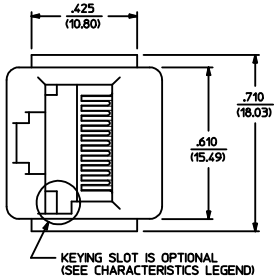

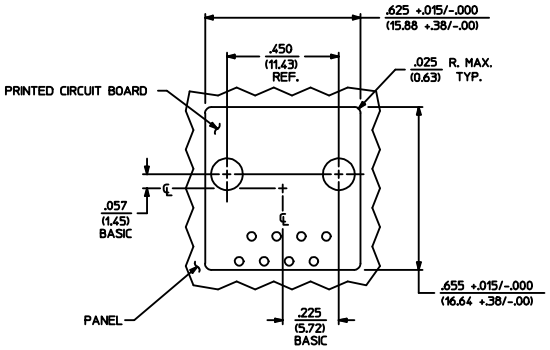

PANEL CUT-OUT FOR CONNECTOR SIZE 8

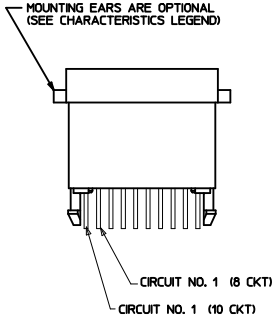

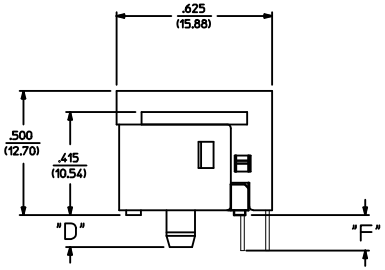

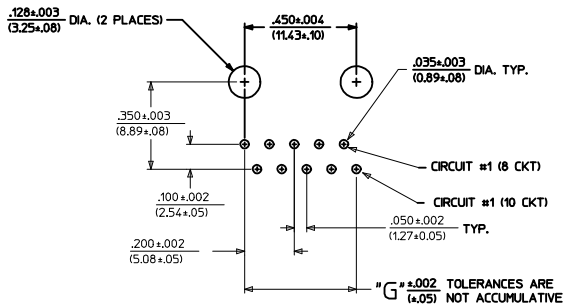

P.C. BOARD LAYOUT FOR CONNECTOR SIZE 8

10 CIRCUIT SHOWN

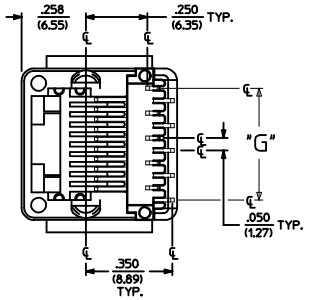

SIZE 8 MODULAR JACK LOADED WITH 10 TERMINALS SHOWN ABOVE

ADD COSMETIC SPEC
EC NO: UCP2009-1267
DRWN:JKLOSTEMEIER 2008/12/01
CHKD:JBELL 2008/12/02
APPR:FSMITH 2008/12/02
DESCRIPTION
REV H2

QUALITY SYMBOLS: ▼=0 ▽=0

GENERAL TOLERANCES (UNLESS SPECIFIED)	mm	INCH
4 PLACES	± ---	± ---
3 PLACES	± ---	± .010
2 PLACES	± 0.25	± ---
1 PLACE	± ---	± ---
ANGULAR ±1/2°		

DRAFT WHERE APPLICABLE MUST REMAIN WITHIN DIMENSIONS

DIMENSION STYLE: IN/MM
SCALE: 1:1
DESIGN UNITS: INCH
THIRD ANGLE PROJECTION

DRAWN BY: BAP	DATE: 1992/04/09	TITLE: ASSEMBLY, VERTICAL LOW PROFILE MODULAR JACKS (CONNECTOR SIZE 8)
CHECKED BY: BAP	DATE: 1992/04/09	
APPROVED BY: RAS	DATE: 1992/04/09	MOLEX INCORPORATED
MATERIAL NO.: SEE SHEET 5		DOCUMENT NO.: SDA-42878-****
SIZE: D		SHEET NO.: 3 OF 5

THIS DRAWING CONTAINS INFORMATION THAT IS PROPRIETARY TO MOLEX INCORPORATED AND SHOULD NOT BE USED WITHOUT WRITTEN PERMISSION

42878

"X"=NOT TOOLED	ASSEMBLY ITEM NUMBER	PART CHARACTERISTICS				
		EXTERNAL CONNECTOR SIZE	NUMBER OF POSITIONS	P. C. BOARD THICKNESS	POLARIZATION OPTION	MOUNTING EARS OPTION
	42878-8408	8 POS. BODY	8	.062	NO	YES
	42878-8410				NO	NO
	42878-8456				YES	YES
	42878-8458			.062	YES	NO
	42878-8504			.125	NO	YES
	42878-8506				NO	NO
	42878-8552				YES	YES
	42878-8554		8	.125	YES	NO
	42878-8696		6	.062	NO	YES
	42878-8698				NO	NO
	42878-8744				YES	YES
	42878-8746			.062	YES	NO
	42878-8792			.125	NO	YES
	42878-8794				NO	NO
	42878-8840				YES	YES
	42878-8842	8 POS. BODY	6	.125	YES	NO

"X"=NOT TOOLED	ASSEMBLY ITEM NUMBER	PART CHARACTERISTICS				
		EXTERNAL CONNECTOR SIZE	NUMBER OF POSITIONS	BOARD THICKNESS/ P.C. TAIL OPTION	POLARIZATION OPTION	MOUNTING EARS OPTION
	42878-8984	8 POS. BODY	4	.062	NO	YES
	42878-8986				NO	NO
	42878-9032				YES	YES
	42878-9034			.062	YES	NO
	42878-9080			.125	NO	YES
	42878-9082				NO	NO
	42878-9128				YES	YES
	42878-9130		4	.125	YES	NO
	42878-9272		2	.062	NO	YES
	42878-9274				NO	NO
	42878-9320				YES	YES
	42878-9322			.062	YES	NO
	42878-9368			.125	NO	YES
	42878-9370				NO	NO
	42878-9416				YES	YES
	42878-9418	8 POS. BODY	2	.125	YES	NO

"X"=NOT TOOLED	ASSEMBLY ITEM NUMBER	PART CHARACTERISTICS				
		EXTERNAL CONNECTOR SIZE	NUMBER OF POSITIONS	BOARD THICKNESS/ P.C. TAIL OPTION	POLARIZATION OPTION	MOUNTING EARS OPTION
	42878-1001	8 POS. BODY	10	.062	NO	YES
	42878-1003			.062	NO	NO
	42878-1025			.125	NO	YES
	42878-1027				NO	NO
	42878-1037				YES	YES
	42878-1039	8 POS. BODY	10	.125	YES	NO

CHARACTERISTICS LEGEND
EXTERNAL CONNECTOR BODY DIMENSIONS: AVAILABLE IN 4, 6, AND 8 POSITION BODY
NUMBER OF CONTACT POSITIONS: CONNECTOR SIZE 4 ACCOMMODATES 2, OR 4 TERMINALS, CONNECTOR SIZE 6 ACCOMMODATES 2, 4, OR 6 TERMINALS, CONNECTOR SIZE 8 ACCOMMODATES 2, 4, 6, 8, OR 10 TERMINALS
POLARIZATION OPTION: (AVAILABLE ON CONNECTOR SIZE 8 ONLY) "NO"- WITHOUT KEYING SLOT "YES"- WITH KEYING SLOT
MOUNTING EARS OPTION: "YES"- PART WITH MOUNTING EARS "NO"- PART WITHOUT MOUNTING EARS

(SEE SHEET 3 FOR PART DESCRIPTIONS AND DIMENSIONS)

SEE SHEET ONE
EC NO: UCP2004-1617
DRWN:L.SCHMIDT 2004/03/03
CHKD:L.SCHMIDT 2004/03/03
APPR:F.SMITH 2004/03/03
DESCRIPTION
REV
H

QUALITY SYMBOLS
▼ = 0
▽ = 0

GENERAL TOLERANCES (UNLESS SPECIFIED)

	mm	INCH
4 PLACES	± ---	± ---
3 PLACES	± ---	± ---
2 PLACES	± ---	± ---
1 PLACE	± ---	± ---
ANGULAR ±1/2°		

DRAFT WHERE APPLICABLE
MUST REMAIN WITHIN DIMENSIONS

SCALE ---
DESIGN UNITS INCH
DIMENSION STYLE IN/MM
DRAWN BY BAP DATE 1992/04/09
CHECKED BY BAP DATE 1992/04/09
APPROVED BY RAS DATE 1992/04/09

THIRD ANGLE PROJECTION
REVISE ON CAD ONLY

TITLE
ASSEMBLY, VERTICAL LOW PROFILE MODULAR JACKS (CONNECTOR SIZE 8)

MOLEX INCORPORATED

MATERIAL NO. SEE CHART
DOCUMENT NO. SDA-42878-****
SHEET NO. 5 OF 5

THIS DRAWING CONTAINS INFORMATION THAT IS PROPRIETARY TO MOLEX INCORPORATED AND SHOULD NOT BE USED WITHOUT WRITTEN PERMISSION

D