PART NAME	HAND-HELD PLASTIC BOX, STYLE 3	PART NO.	HP-3664-B	REVISION DATE	2-6-2009

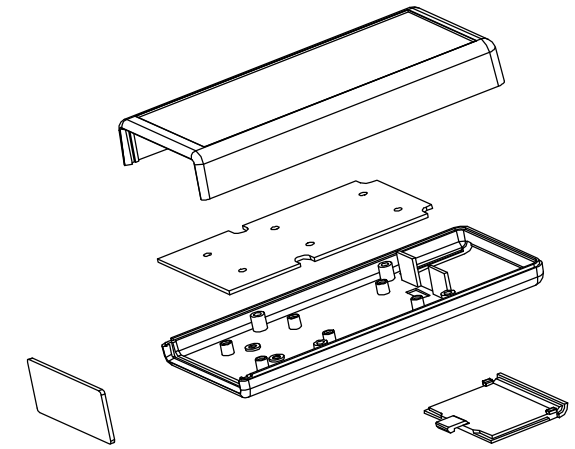

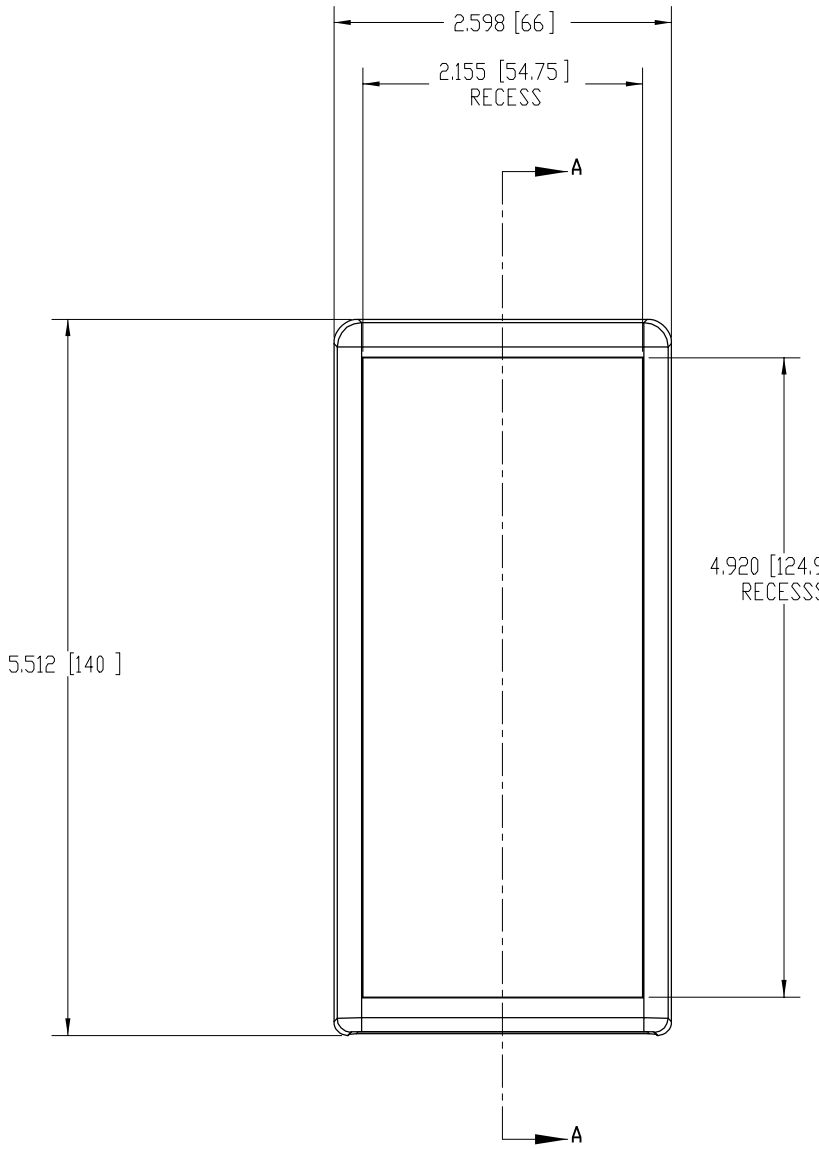

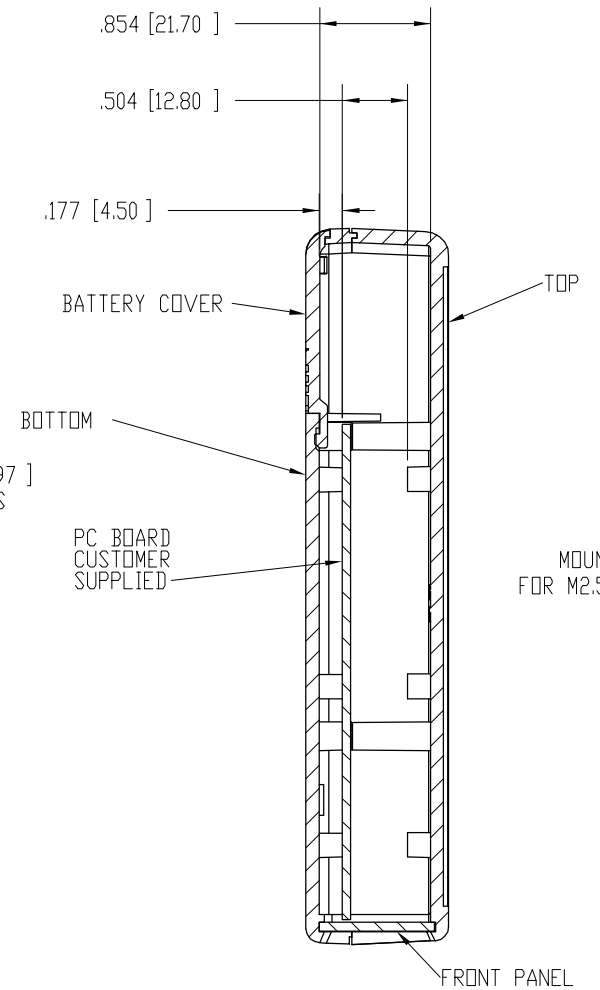

SECTION A-A

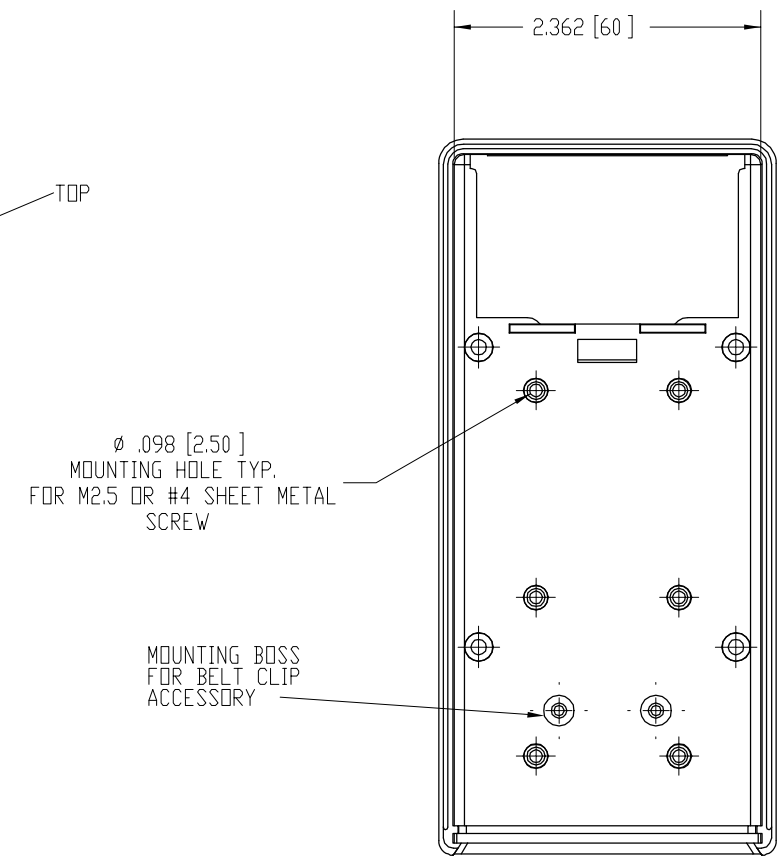

VIEW OF BOTTOM HALF

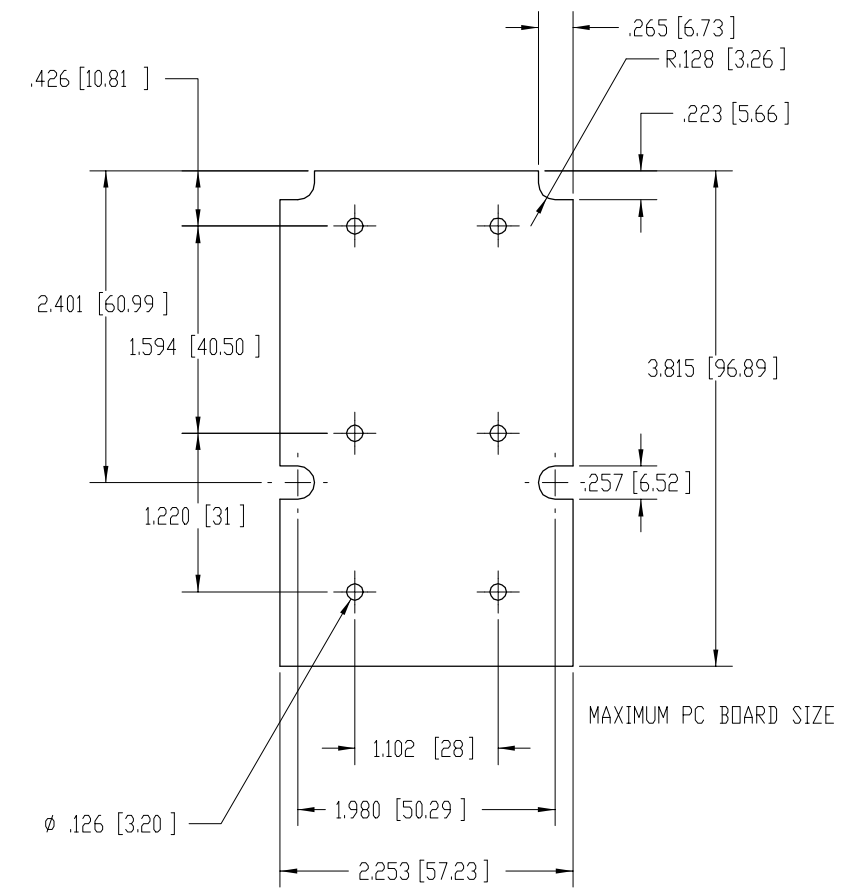

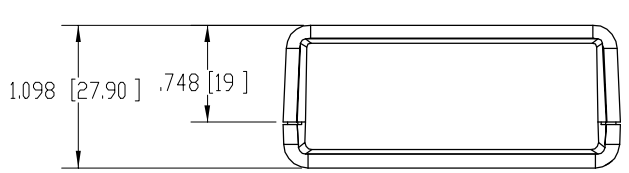

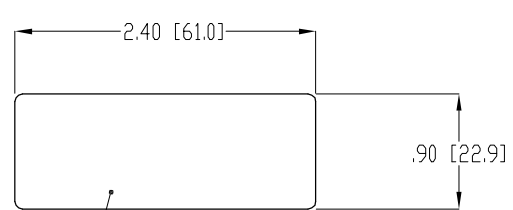

END PANEL

VIEWING AREA
2.28[57.9] X .82 [20.8]

MATERIAL AND FINISH:

BLACK HIGH-IMPACT ABS (UL94-HB) - TOP, BOTTOM, COVER, AND END PANEL

FOUR (4) M3 X .63 [16] LG SCREWS SUPPLIED FOR ASSEMBLY

OPTIONAL ACCESSORIES:
INFRARED PANELS P/N HP-3645
BELT CLIP (BLACK) P/N HP-3595-BCB
AA BATTERY CONTACT KIT: HH-3442-C
9V BATTERY CLIP: HH-3449
2 AAA BATTERY HOLDER: HH-3630
4 AAA BATTERY HOLDER: HH-3631
2 AA BATTERY HOLDER: HH-3632
4 AA BATTERY HOLDER: HH-3633
9V BATTERY HOLDER: HH-3634