THIS DRAWING IS UNPUBLISHED. RELEASED FOR PUBLICATION -,- .
© COPYRIGHT - By - ALL RIGHTS RESERVED.

REVISIONS

P	LTR	DESCRIPTION	DATE	DWN	APVD
	D	REVISED PER ECO-17-002455	23FEB2017	SY	SY

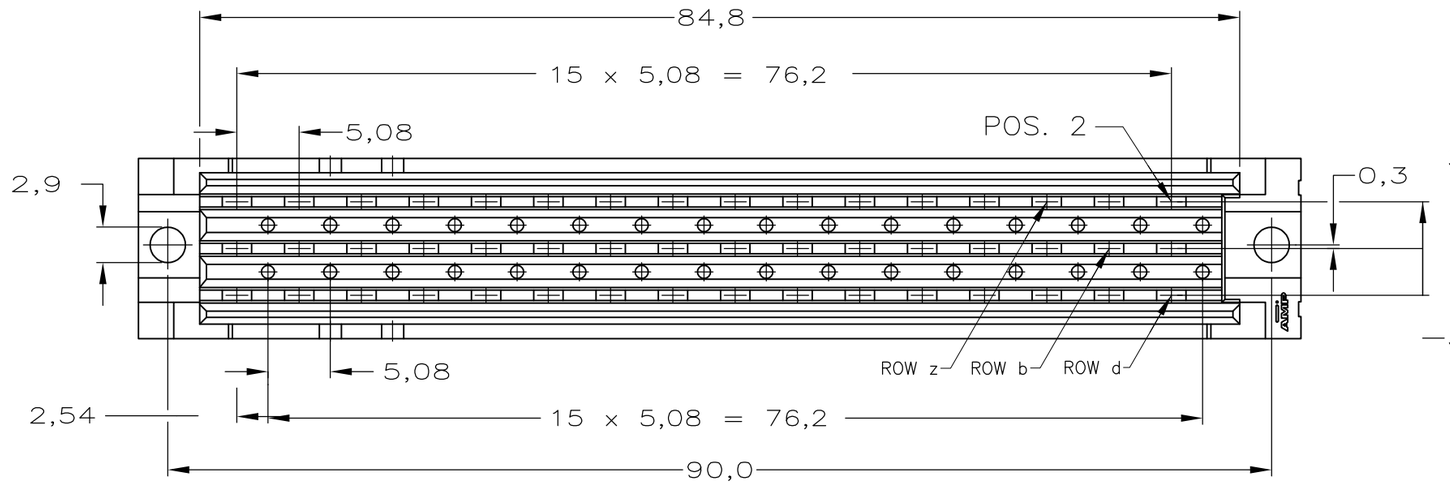

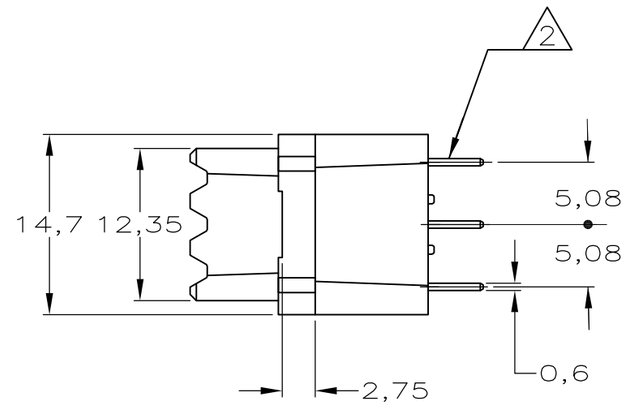

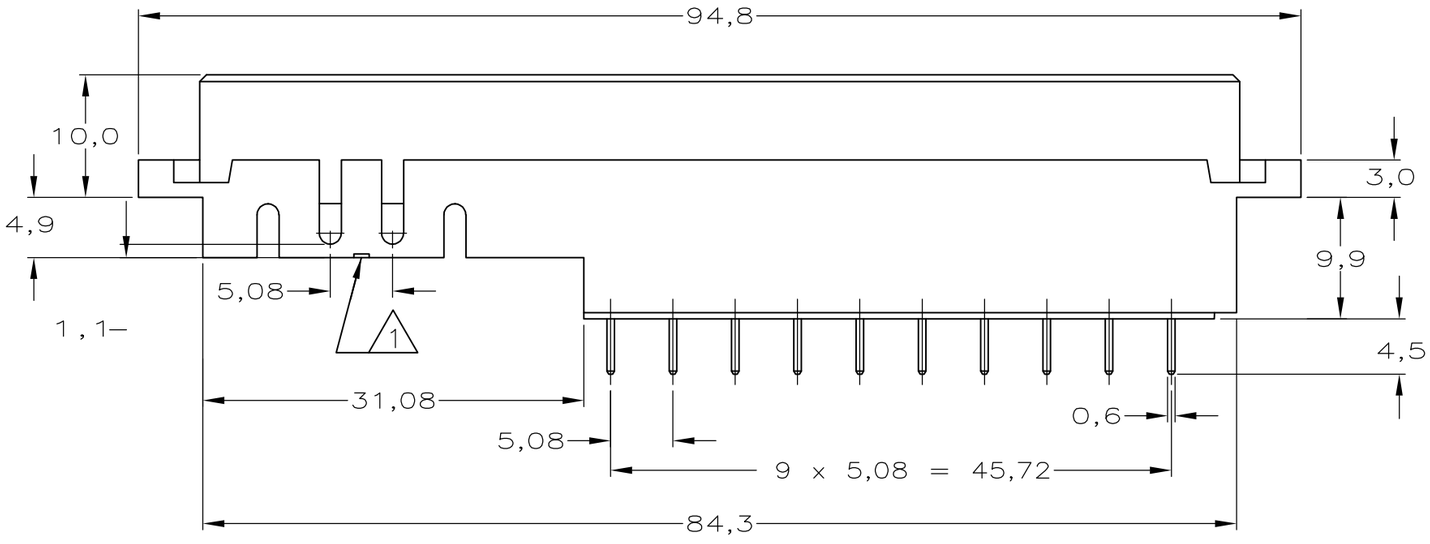

NOTES:

1. 2 CHAMFERS AT INSIDE FOR LOCATION OF REMOVAL TOOL FOR MODULE p.n.216519-1
2. SOLDERPOSTS SUITABLE FOR 0,80 OR 1,0 NOM. DIA HOLES

CONFIRMS TO IEC60603-2 PERFORMANCE LEVEL II REQUIREMENT IN CONTACT AREA Sn OVER Ni IN SOLDER AREA	HOUSING: THERMOPL. POLYESTER G.F. COLOUR: GREY CONTACTS: PHOSPHORBRONZE	216520-4
FINISH	MATERIAL	PARTNUMBER

ROW	20	18	16	14	12	10	8	6	4	2
d	X	X	X	X	X	X	X	X	X	X
b	X	X	X	X	X	X	X	X	X	X
z	X	X	X	X	X	X	X	X	X	X
POS										

AN ASTERISK ,,X'' DENOTES A CONTACT

THIS DRAWING IS A CONTROLLED DOCUMENT.

DIMENSIONS: mm

TOLERANCES UNLESS OTHERWISE SPECIFIED:
0 PLC ± -
1 PLC ± -
2 PLC ± -
3 PLC ± -
4 PLC ± -
ANGLES ± -

MATERIAL -

FINISH -

DWN L.V.D.HEIJDEN 15 NOV.1994
CHK J.V.GUNSVEN -
APVD L.V.SOEST -
PRODUCT SPEC —
APPLICATION SPEC —
WEIGHT 0.000000

TE Connectivity

NAME 3x10 POS. WITH SOLDER POSTS 3x6 POS WITH FEATURE FOR CRIMP-ON, SNAP-IN .

SIZE	CAGE CODE	DRAWING NO	RESTRICTED TO
A3	00779	C-216520	—

CUSTOMER DRAWING | SCALE — | SHEET 1 OF 1 | REV D