THIS DRAWING IS UNPUBLISHED. RELEASED FOR PUBLICATION -,- .
© COPYRIGHT - By - ALL RIGHTS RESERVED.

LOC	DIST
AF	50

REVISIONS

P	LTR	DESCRIPTION	DATE	DWN	APVD
	L	REVISED PER ECR-13-004074	27AUG2013	KH	PD

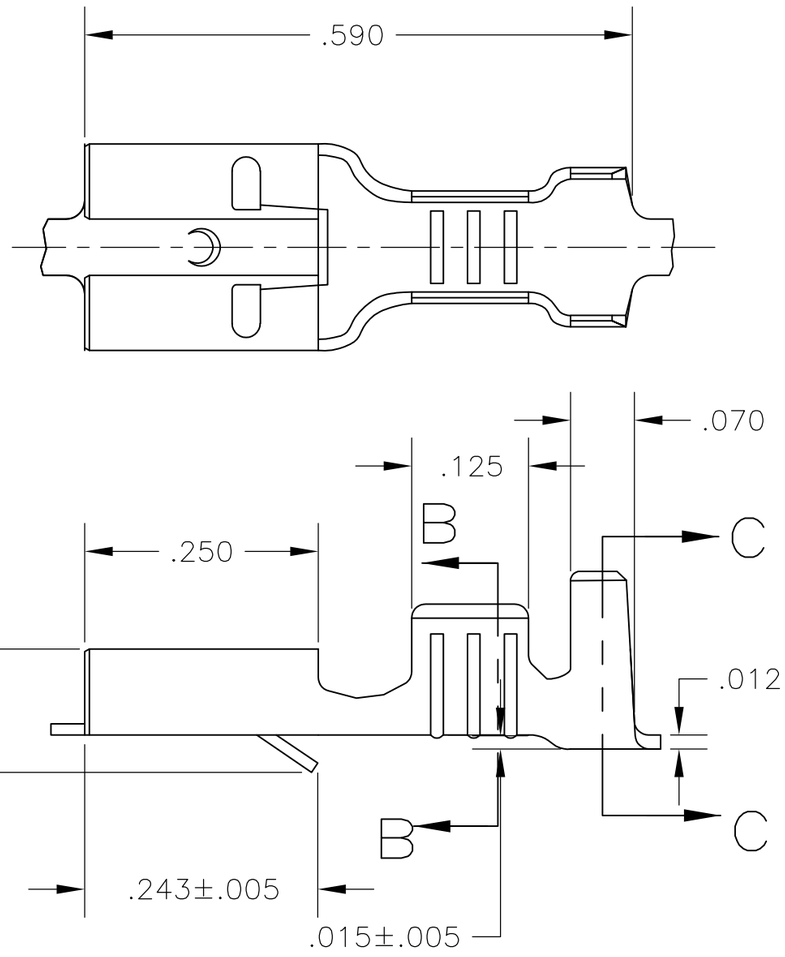

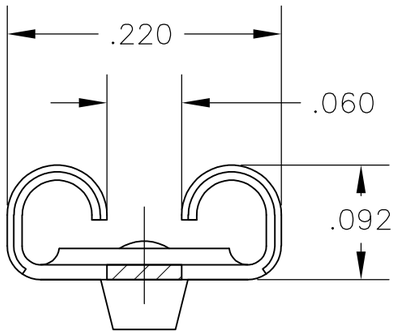

VIEW A-A
SCALE 8:1

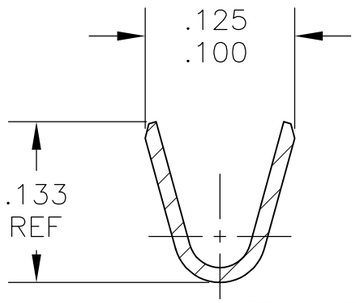

SECTION B-B
SCALE 8:1

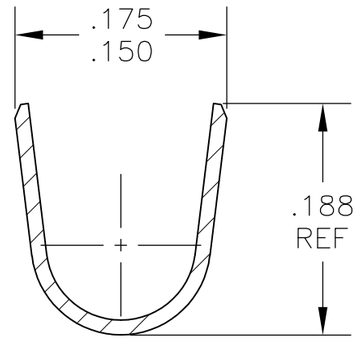

SECTION C-C
SCALE 8:1

1. CONTINUOUS STRIP ON REELS.
2. WIRE SIZE IS #22-#16 AWG
3. INSULATION RANGE IS .090-.130 DIA.
4. MATING TAB THK IS .032±.001

TIN	62802-2
-	62802-1
FINISH	PART NO.

THIS DRAWING IS A CONTROLLED DOCUMENT.

DIMENSIONS: INCHES

TOLERANCES UNLESS OTHERWISE SPECIFIED:

0 PLC	± -
1 PLC	± -
2 PLC	± -
3 PLC	± .010
4 PLC	± -
ANGLES	± -

MATERIAL: BRASS

FINISH: SEE TABLE

DWN	JR RUTH	10/31/89
CHK	MS FEHER	10/31/89
APVD	J GILLESPIE	2/20/90
PRODUCT SPEC	-	
APPLICATION SPEC	-	
WEIGHT	-	

CUSTOMER DRAWING

TE Connectivity

NAME: RECEPTACLE, FASTIN-FASTON, .187 SERIES -

SIZE	CAGE CODE	DRAWING NO	RESTRICTED TO
A3	00779	C-62802	-

SCALE	SHEET	REV
6:1	1 OF 1	L