POSITIONS/ CONTACTS	A		B	
	INCH	MM	INCH	MM
02/04	0.100	2.54	0.220	5.58
03/06	0.200	5.08	0.320	8.12
04/08	0.300	7.62	0.420	10.66
05/10	0.400	10.16	0.520	13.20
06/12	0.500	12.70	0.620	15.74
07/14	0.600	15.24	0.720	18.28
08/16	0.700	17.78	0.820	20.82
09/18	0.800	20.32	0.920	23.36
10/20	0.900	22.86	1.020	25.90
11/22	1.000	25.40	1.120	28.44
12/24	1.100	27.94	1.220	30.98
13/26	1.200	30.48	1.320	33.52
14/28	1.300	33.02	1.420	36.06
15/30	1.400	35.56	1.520	38.60
16/32	1.500	38.10	1.620	41.14
17/34	1.600	40.64	1.720	43.68
18/36	1.700	43.18	1.820	46.22
19/38	1.800	45.72	1.920	48.76
20/40	1.900	48.26	2.020	51.30
21/42	2.000	50.80	2.120	53.84
22/44	2.100	53.34	2.220	56.38
23/46	2.200	55.88	2.320	58.92
24/48	2.300	58.42	2.420	61.46
25/50	2.400	60.96	2.520	64.00
26/52	2.500	63.50	2.620	66.54
27/54	2.600	66.04	2.720	69.08
28/56	2.700	68.58	2.820	71.62
29/58	2.800	71.12	2.920	74.16
30/60	2.900	73.66	3.020	76.70
31/62	3.000	76.20	3.120	79.24
32/64	3.100	78.74	3.220	81.78
33/66	3.200	81.28	3.320	84.32
34/68	3.300	83.82	3.420	86.86
35/70	3.400	86.36	3.520	89.40
36/72	3.500	88.90	3.620	91.94
37/74	3.600	91.44	3.720	94.48
38/76	3.700	93.98	3.820	97.02
39/78	3.800	96.52	3.920	99.56
40/80	3.900	99.06	4.020	102.10

PART NUMBER CODING

xPxCxx2LJBN-RC

NUMBER OF POSITIONS
(CONTACTS PER ROW, 02 THRU 40)

PLATING
(.000030"~.000050" NICKEL UNDERPLATED)
P = GOLD FLASH OVERALL
T= TIN OVERALL

INSULATOR MATERIAL
P = POLYESTER, UL 94V-0.
PROCESSING TEMP. = WAVE / MANUAL SOLDERING ONLY
N = NYLON 6T, UL 94V-0.
PROCESSING TEMP. = WAVE / MANUAL SOLDERING ONLY

REVISIONS				
REV.	ECO. NO	DESCRIPTION	DATE	BY
G	2516	UPDATE NOTE 1 AND ADD NOTE 10 MATING PARTS	02/14/2012	LH
H	2730	UPDATED PROCESSING TEMP. FOR NYLON 6T AND UPDATED ROW SPACING TOLERANCE ±0.15 mm (WAS ±0.05 mm)	03/18/2015	LH

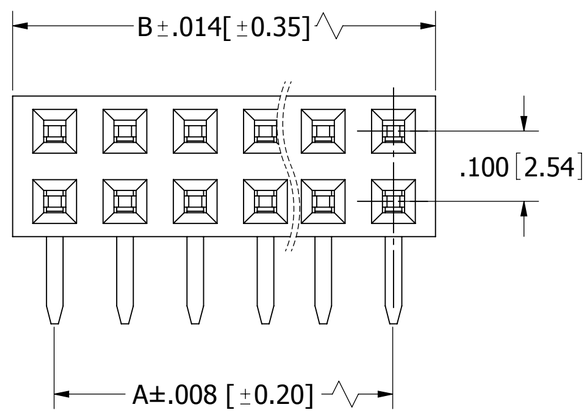

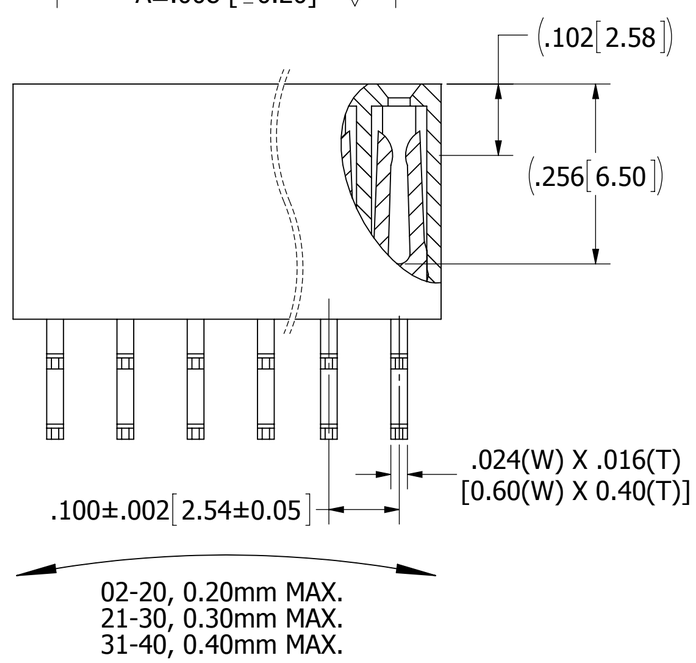

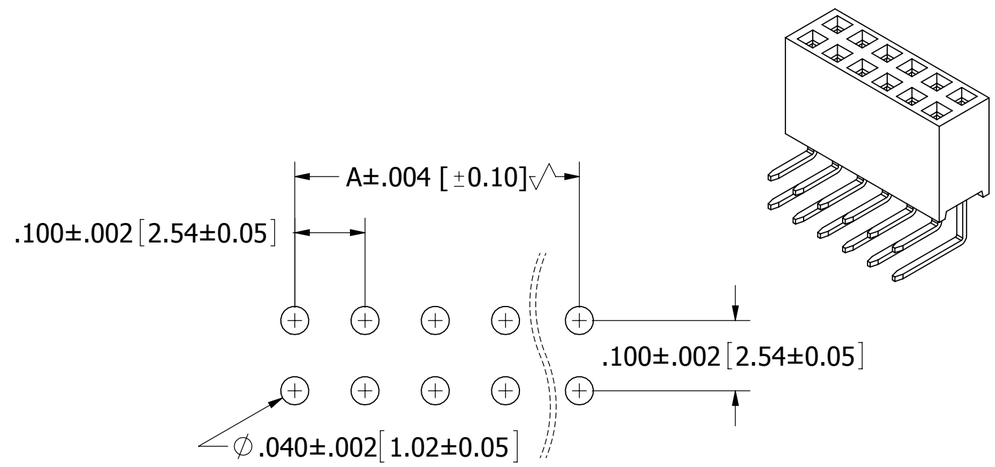

RECOMMENDED PCB LAYOUT

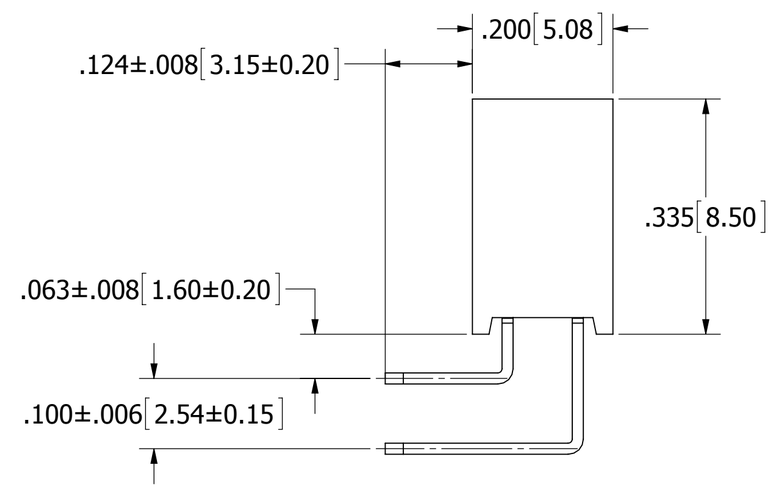

NOTES:
1. INSULATOR MATERIAL: SEE PART NUMBER CODING.
2. CONTACT MATERIAL: PHOSPHOR BRONZE.
3. CONTACT PLATING: SEE PART NUMBER CODING.
4. CURRENT RATING: 3 AMPS
5. VOLTAGE RATING: 250V AC/DC
6. INSULATOR RESISTANCE: 5000 MEGOHMS MIN.
7. CONTACT RESISTANCE: 20 MILLIOHMS MAX.
8. DIELECTRIC WITHSTANDING: 500V AC.
9. OPERATING TEMPERATURE: -40° C TO +105° C.
10. MATES WITH SULLINS .100 [2.54] CONTACT CENTER MALE HEADER SERIES. (.025 [0.64] SQUARE POSTS)

RoHS COMPLIANT

UNLESS OTHERWISE SPECIFIED:
DIMENSIONS ARE IN INCHES [MM]

TOLERANCES:

ANGULAR: ± 5°

DECIMALS
.X=± .012 [.3]
.XX=± .008 [.20]
.XXX=± .006 [.15]

DRAWN	DATE	NAME
	2/15/2008	JH

THE INFORMATION HEREIN CONTAINS PROPIETARY INFORMATION OF SULLINS ELECTRONICS AND IS NOT TO BE REPRODUCED, USED OR DISCLOSED TO OTHERS FOR ANY PURPOSE EXCEPT AS SPECIFICALLY AUTHORIZED IN WRITING BY AN OFFICER OF SULLINS ELECTRONICS.

SULLINS CONNECTOR SOLUTIONS

TITLE
HEADER FEMALE, .100" [2.54mm] CC, 2 ROW, RA

PART NUMBER
xPxCxx2LJBN-RC

SIZE	CAGE CODE	DWG. NO.	REV
C	54453	10494	H

SCALE: 8:1 | SHEET 1 OF 1

FILE NAME: 10494, P(N)PxCxx2LJBN-RC