REFERENCE SPECIFICATIONS

-NFC 93425 (in compliance with HE 507)

PHYSICAL CHARACTERISTICS

-INSULATOR MATERIAL: THERMOPLASTIC ,UL94V0

-CONTACT MATERIAL: BRASS

-ACCESSORIES: BRASS

-SHELLS: STEEL

ELECTRICAL CHARACTERISTICS

-NOMINAL CURRENT: 40A

-CONTACT RESISTANCE: <= 7.3 mOhms

-CONTACT/CONTACT : >=1000 V

-CONTACT/GROUND : >=1200 V

-INSULATION RESISTANCE: >=5000 MOhms

ENVIRONMENTAL CHARACTERISTICS

- CLIMATIC CATEGORY: 55/125/21

TEMPERATURE RANGE -55°C TO +125°C

DAMP HEAT STEADY STATE 21 DAYS

SALT SPRAY 24 HOURS

MECHANICAL CHARACTERISTICS

- RETENTION AGAINST TORQUE: - Threaded insert: 0.7 N.m minimum
  - Female screw : 0.5 N.m minimum

PRESS FIT PERFORMANCES

	PRESS FIT CONTACTS
INSERTION FORCE	<= 200 N Average insertion 160N
EXTRACTION FORCE	>= 30 N

DBL5W5P81C6M40LF

Series

Shell size: **E A B C** (see sheet 3)

Front accessory definition (see sheet 2)

- **blank**: without accessory
- **L** : threaded insert M3
- **O** : threaded insert UNC 4-40
- **V** : female screw UNC 4-40

Layout of contacts (see sheet 3)

Contacts

- **P** : Pin

Termination type

- **81C** Right angle/Europe standard

Plating

- **5** 200 matings/unmatings
- **6** 500 matings/unmatings

PCB accessories definition(see sheet 2)

- **M** Metal brackets
- **A** Without accessory

Power contacts

- **40** : Fitted with power contacts 40 Amp.

See note RoHS

NOTE RoHS INFORMATION

- The "LF" products meet european union Directives and other country regulations as described in GS-22-008.
- Termination plating spec:
  - Ni 1.27µmi+Sn 0.5 to 1.5µ(pure bright)
- Active area plating spec:
  - Ni + Gold
- Shell plating :2 to 4µm Cu + Ni + 3 to 10µmm Sn(pure bright)
- Accessories: Sn pure bright + nickel
- Packaging spec: See GS-14-920

TABLE 1:PCB HOLE DIAMETERS

		SnPb holes for CONTACTS	Sn holes for CONTACTS	holes ACCESSORIES
P.C.B HOLE DEFINITION (NOTE-1 AND 2)	DRILL DIAMETER	Ø3.22 REF(NOTE 3)	Ø3.22 REF(NOTE 3)	Ø3.10±0.10
	DRILLED HOLE	Ø3.19-3.25	Ø3.19-3.25	
	COPPER PLATING	25µ MINI (RECOMMENDED 50µ MAXI)	25µ MINI (RECOMMENDED 50µ MAXI)	
	TIN-LEAD PLATING	15µ MAXI (RECOMMENDED 5µ MINI)		
	TIN PLATING		0.8 tol,2µ	
	FINISH HOLE (AFTER REFLOW)	Ø 3.02-3.20	Ø3.08-3.20	

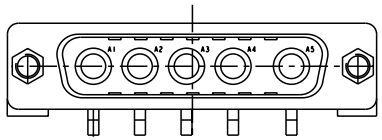

DETAIL OF PRESS FIT
scale:3

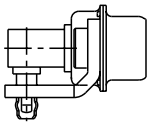

5W5 FOR EXAMPLE

NOTE-1:THESE DIMENSIONS MUST BE RESPECT TO SECURE PRESS-FIT PIN PERFORMANCES.
NOTE-2: ACCORDING TO IEC-352-5 SPEC.
NOTE-3: MAJOR REQUIREMENT FOR PRESS FIT PIN PERFORMANCE

rev	ecn no	dr	date
B	LS06-0208	LGO	2006/12/13
C	LS07-0273	MPE	2007/11/05
-	-	-	-
-	-	-	-
-	-	-	-
-	-	-	-
-	-	-	-

www.fciconnect.com

Dr	M PESSON	11/10/05
Eng	11/10/05	P LEGARE
Chr		
Appr		

surface - ISO 1302 ✓ | tolerance std ISO 406 ISO 1101 | projection | mm

TOLERANCES UNLESS OTHERWISE SPECIFIED

ANGULAR		LINEAR		
0°	±2°	0.X	±0.3	
		0.XX	±0.1	
		0.XXX	±0.05	

size A2 | Scale 2:1

ECN LS07-0273

Product family - | Spec ref

title: SUB MALE DW EUROPE foot print
full power right angle press fit

catalog no -

dwg no C01-8639-2319 | Rev. C

YY | sheet 1 of 5

Copyright FCI.

REV F - 2006-06-17

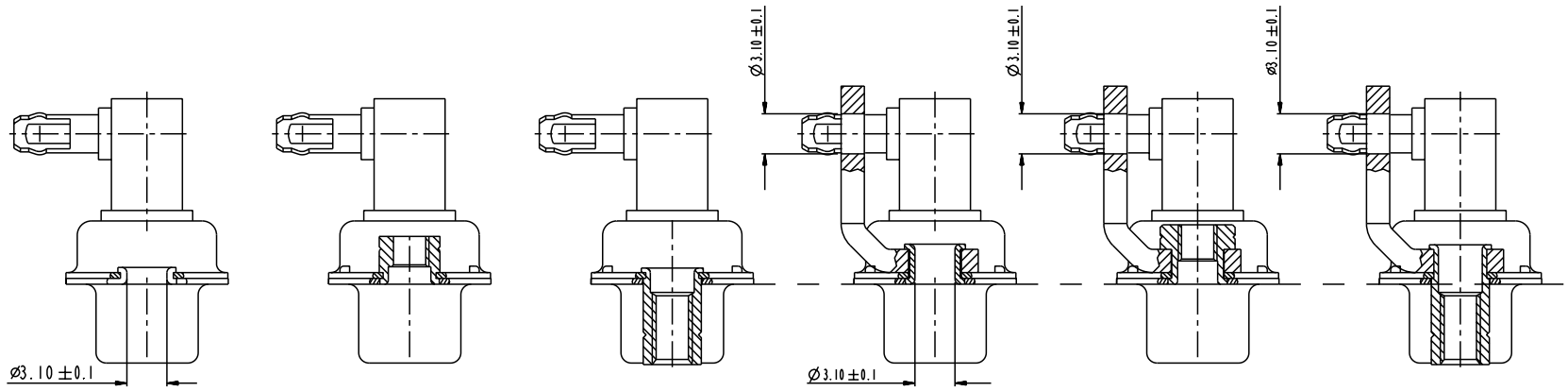

FRONT ACCESSORY	**Blank** Without	**L** insert M3 **O** insert UNC 4.40	**V** insert UNC 4.40	**Blank** Without	**L** insert M3 **O** insert UNC 4.40	**V** insert UNC 4.40
PCB ACCESSORIES	**A** Without	**A** Without	**A** Without	**M** Metal brackets	**M** Metal brackets	**M** Metal bracket

SCALE:4

www.fciconnect.com			surface - ISO 1302		tolerance std ISO 406 ISO 1101		projection	mm
			TOLERANCES UNLESS OTHERWISE SPECIFIED					
Dr	M PESSON	11/10/05	ANGULAR	LINEAR	0.X	±0.3	size A2	Scale 2:1
Eng	11/10/05	P LEGARE			0.XX	±0.1		
Chr			0° ±2°		0.XXX	±0.05	ECN	LS07-0273
Appr			Product family -				Spec ref	
title	SUB MALE DW EUROPE foot print full power right angle press fit						dwg no C01-8639-2319	Rev. C
	catalog no -						YY	sheet 2 of 5

Copyright FCI.

REV F - 2006-06-17

PART NUMBER	AMPS	MATINGS/ UNMATINGS	FRONT ACCESSORY	PCB ACCESSORIES
D*xWxP8IC5A40LF	40	200	without	without
D*LxWxP8IC5A40LF	40	200	insert M3	without
D*OxWxP8IC5A40LF	40	200	insert UNC 4.40	without
D*VxWxP8IC5A40LF	40	200	female screw UNC 4.40	without
D*xWxP8IC5M40LF	40	200	without	metal bracket
D*LxWxP8IC5M40LF	40	200	insert M3	metal bracket
D*OxWxP8IC5M40LF	40	200	insert UNC 4.40	metal bracket
D*VxWxP8IC5M40LF	40	200	female screw UNC 4.40	metal bracket

shell size *	LAYOUTS xWx
E	2V2
A	3V3
A	3W3
B	5W5
C	8W8

PART NUMBER	AMPS	MATINGS/ UNMATINGS	FRONT ACCESSORY	PCB ACCESSORIES
D*xWxP8IC6A40LF	40	500	without	without
D*LxWxP8IC6A40LF	40	500	insert M3	without
D*OxWxP8IC6A40LF	40	500	insert UNC 4.40	without
D*VxWxP8IC6A40LF	40	500	female screw UNC 4.40	without
D*xWxP8IC6M40LF	40	500	without	metal bracket
D*LxWxP8IC6M40LF	40	500	insert M3	metal bracket
D*OxWxP8IC6M40LF	40	500	insert UNC 4.40	metal bracket
D*VxWxP8IC6M40LF	40	500	female screw UNC 4.40	metal bracket

Copyright FCI.

www.fciconnect.com

surface - ISO 1302 | tolerance std ISO 406 ISO 1101 | projection | mm

TOLERANCES UNLESS OTHERWISE SPECIFIED

Dr	M PESSON	11/10/05	ANGULAR	LINEAR	0.X	±0.3	size A2	Scale 2:1
Eng	11/10/05	P LEGARE			0.XX	±0.1		
Chr			0° ±2°		0.XXX	±0.05	ECN	LS07-0273
Appr			Product family -				Spec ref	

Title: SUB MALE DW EUROPE foot print
full power right angle press fit

dwg no: C01-8639-2319 | Rev. C

catalog no -

YY | sheet 3 of 5

REV F - 2006-06-17

2V2

LAYOUT AND CONNECTOR DIMENSIONS

For PCB hole diameters see table 1 sheet 1

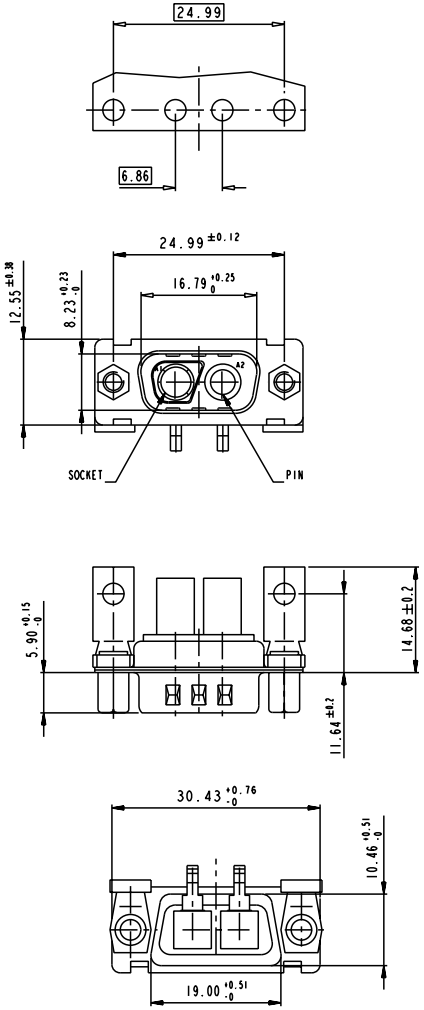

3V3

LAYOUT AND CONNECTOR DIMENSIONS

For PCB hole diameters see table 1 sheet 1

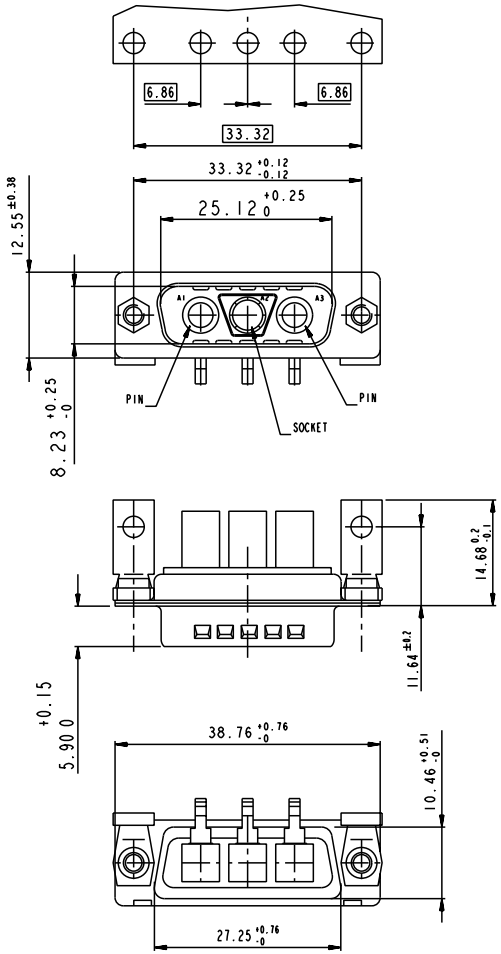

3W3

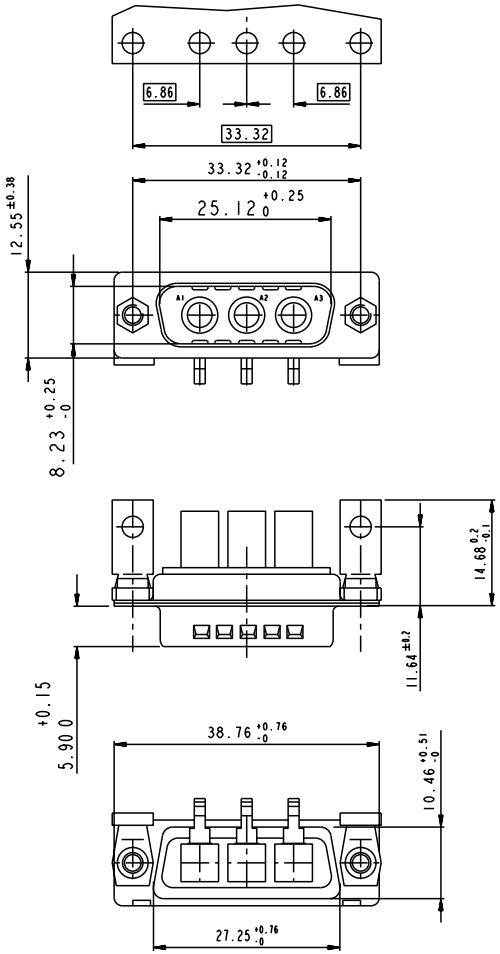

SIDE VIEW FOR ALL LAYOUTS

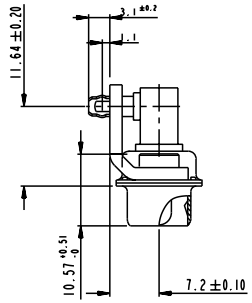

www.fciconnect.com			surface - ISO 1302		tolerance std ISO 406 ISO 1101	projection	mm
			TOLERANCES UNLESS OTHERWISE SPECIFIED				
Dr	M PESSON	11/10/05	ANGULAR	LINEAR	0.X ±0.3	size A2	Scale 2:1
Eng	11/10/05	P LEGARE			0.XX ±0.1		
Chr			0° ±2°		0.XXX ±0.05	ECN LS07-0273	
Appr			Product family -			Spec ref	

title: SUB MALE DW EUROPE foot print
full power right angle press fit

dwg no: C01-8639-2319 Rev. C

catalog no -

YY

sheet 4 of 5

Copyright FCI.

REV F - 2006-06-17

5W5

LAYOUT AND CONNECTOR DIMENSIONS

For PCB hole diameters see table 1 sheet 1

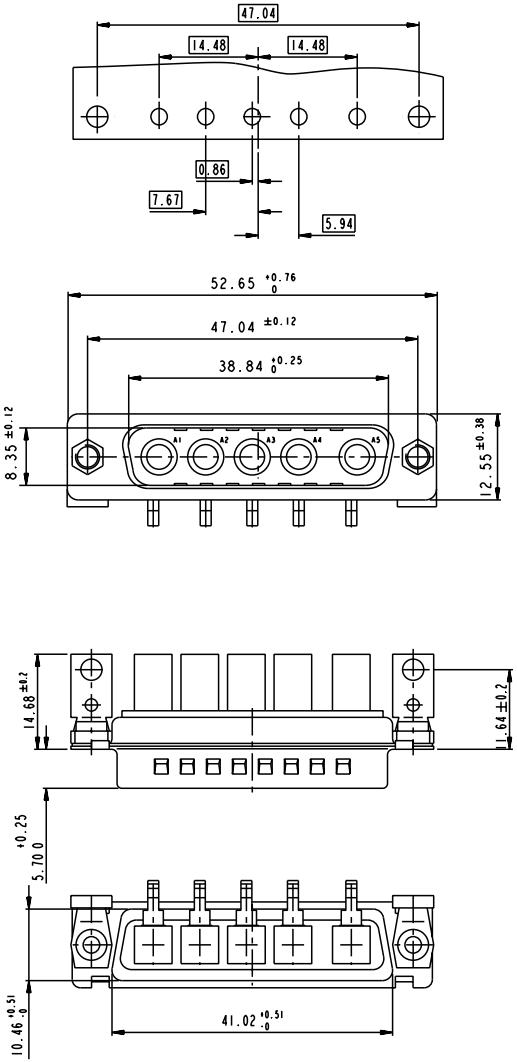

8W8

LAYOUT AND CONNECTOR DIMENSIONS

For PCB hole diameters see table 1 sheet 1

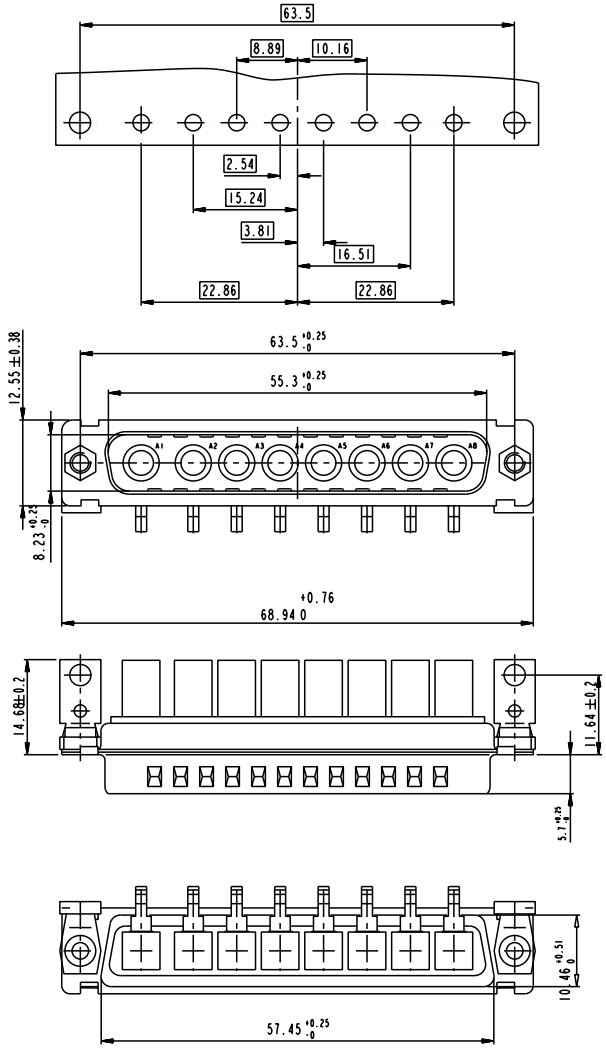

www.fciconnect.com			surface - ISO 1302		tolerance std ISO 406 ISO 1101		projection	mm
			TOLERANCES UNLESS OTHERWISE SPECIFIED					
Dr	M PESSON	11/10/05	ANGULAR	LINEAR	0.X	±0.3	size A2	Scale 2:1
Eng	11/10/05	P LEGARE			0.XX	±0.1		
Chr			0° ±2°		0.XXX	±0.05	ECN	LS07-0273
Appr			Product family -				Spec ref	
title	SUB MALE DW EUROPE foot print full power right angle press fit				dwg no	C01-8639-2319		Rev. C
	catalog no -					YY		sheet 5 of 5

Copyright FCI.

REV F - 2006-06-17