DWG. NO. SD-53324-003

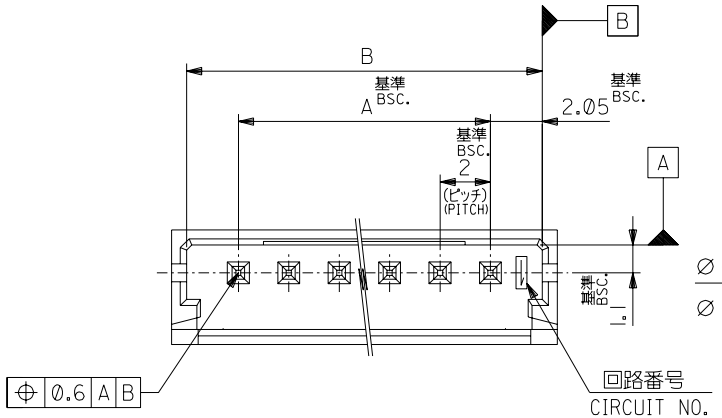

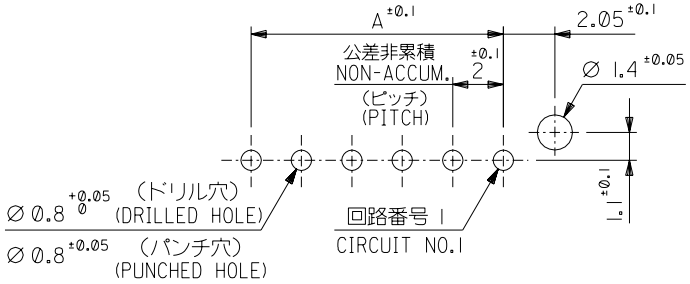

基板取付穴推奨寸法（t＝1．6）

RECOMMENDED P.C. BOARD HOLE DIM.（t＝1．6）

注 記 NOTES

1. 嵌合相手：51090-**00, 52484-**1*
   MATES WITH
2. 材質
   MATERIAL
   ウエハー：ガラス入り　66ナイロン
   UL94V-0　色：表参照
   WAFER : GLASS FILLE 66 NYLON
   UL94V-0, COLOR : SEE CHART
   ピン　：黄銅、スズメッキ
   PIN : BRASS, PRE-TINNED

3. キンクは全ピンに交互に付加。2極はキンク無し。
   SET KINK ALTERNATELY TO ALL CIRCUITS.
   CIRCUIT 2 HAS NO KINK.

4. 製品番号
   MATERIAL NO.
   53324-**6*
   極数CIRCUIT SIZE　色COLOR

ナチュラル（白） NATURAL(WHITE)	0
赤 RED	2
黄 YELLOW	3
青 BLUE	4

無　鉛
LEAD FREE

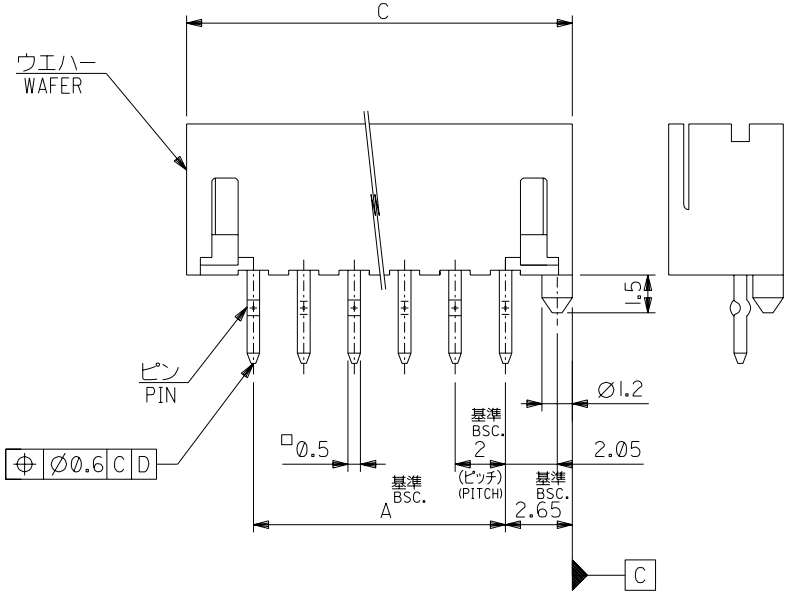

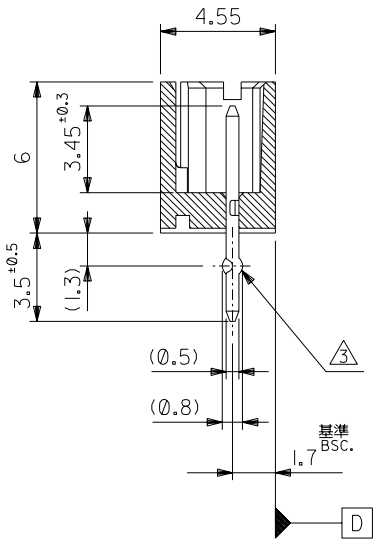

極数 CKT.	C	B	A	4. MATERIAL NO.	MODEL NO.
15	33.3	32.1	28	53324-156*	53324-**6*
14	31.3	30.1	26	-146*	
13	29.3	28.1	24	-136*	
12	27.3	26.1	22	-126*	
11	25.3	24.1	20	-116*	
10	23.3	22.1	18	-106*	
9	21.3	20.1	16	-096*	
8	19.3	18.1	14	-086*	
7	17.3	16.1	12	-076*	
6	15.3	14.1	10	-066*	
5	13.3	12.1	8	-056*	
4	11.3	10.1	6	-046*	
3	9.3	8.1	4	-036*	
2	7.3	6.1	2	53324-026*	

DO NOT SCALE DRAWING

EC NO.	EC NO.	EC NO.	EC NO.	RELEASED	DESCRIPTION
DRWN:	DRWN:	DRWN:	DRWN:	ECNNO. J2003-2361	
CH'K:	CH'K:	CH'K:	CH'K:	DRWN: A.IDA '03/03/13	
APPR:	APPR:	APPR:	APPR:	CH'K: J.MIYAZAWA '03/03/13	
				APPR: YO.ITO '03/03/13	
				0	REV

MATERIAL 材料: 注記参照 SEE NOTES

FINISH 仕上げ: —#—

WIRE RANGE 適用電線範囲: —#—

INS. RANGE 被覆外径: —#—

GENERAL TOLERANCES: (UNLESS SPECIFIED) 一般公差

10 UNDER 未満		±0.2
10 OVER 以上	30 UNDER 未満	±0.25
30 OVER 以上		±0.3
ANGLE 角度		±3°

SCALE 5-1

DESIGN UNITS ☒mm ☐INCH

DRAWN BY & DATE: A. Ida '03/03/13

CHECKED BY & DATE: J. Miyazawa '03/03/13

APPROVED BY & DATE: Y. Ito '03/03/13

THIRD ANGLE PROJECTION

DIMENSIONS: ☐ mm/INCH ☐ INCH/mm ☒ mm ONLY

SHT | REV

REVISE ON CAD ONLY

TITLE: 2.0 WIRE TO BOARD CONN. WAFER ASS'Y (ST.)

molex MOLEX INCORPORATED

CAD FILENAME: SD-53324-003.S01

MATERIAL NO.: SEE CHART

DRAWING NO.: SD-53324-003

SHEET NO.: 1 OF 1

SIZE: B

THIS DRAWING CONTAINS INFORMATION THAT IS PROPRIETARY TO MOLEX INCORPORATED AND SHOULD NOT BE USED WITHOUT WRITTEN PERMISSION.

EN-02J(097) MXJ-54