THIS DRAWING IS UNPUBLISHED. RELEASED FOR PUBLICATION -,- .
© COPYRIGHT - BY TYCO ELECTRONICS CORPORATION. ALL INTERNATIONAL RIGHTS RESERVED.

LOC	DIST
AF	50

REVISIONS

P	LTR	DESCRIPTION	DATE	DWN	APVD
	D	REVISED PER ECR-10-006099	09JUL10	HMR	PD

1. CONTINUOUS STRIP ON REEL.

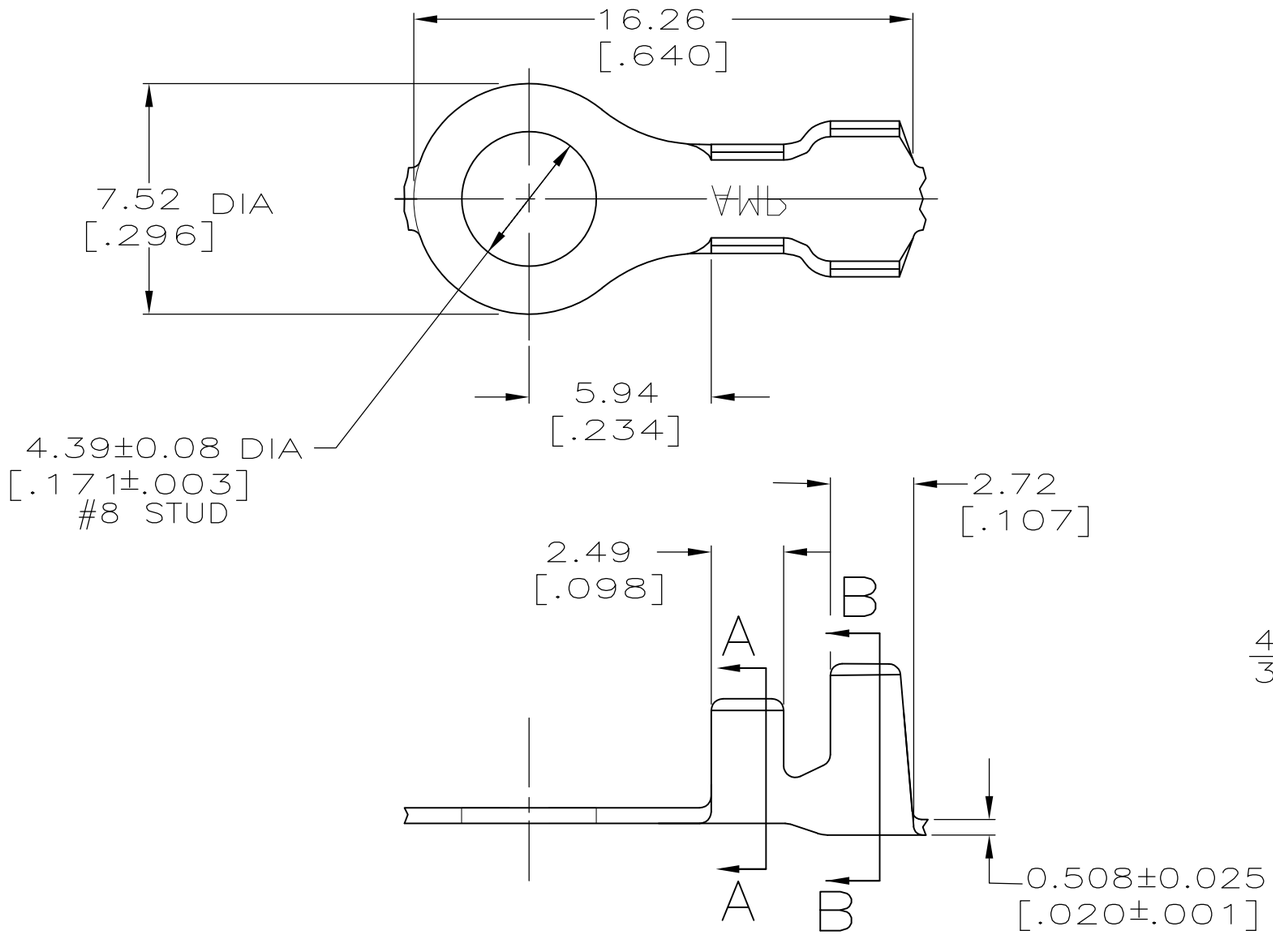

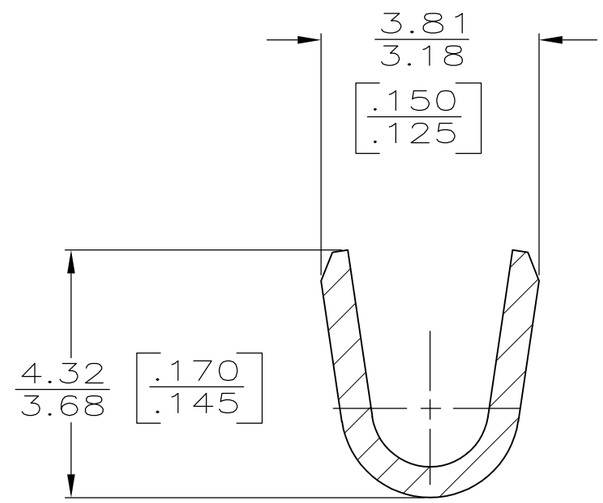

SECTION A–A
SCALE 10:1

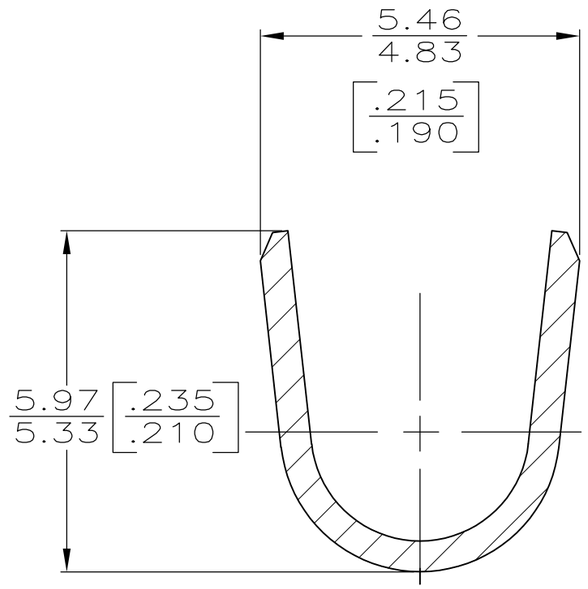

SECTION B–B
SCALE 10:1

FINISH	INSULATION RANGE	WIRE RANGE	PART NO
TIN	3.05–4.32 [.120–.170] DIA	0.8–2.0mm [18–14] AWG OR 2–0.8mm² [18] AWG	63678–2
–			63678–1

OBSOLETE

TYPE	WIDTH	STRIP LENGTH ±0.38 [±.015]	TYPE	WIDTH	HEIGHT ±0.051 [±.002]	WIRE
F OR O	4.57 [.180]	4.06 [.160]	F	3.05 [.120]	1.93 [.076]	(2) 0.8mm² [18]
					2.03 [.080]	2.0mm² [14]
					1.83 [.072]	1.3mm² [16]
					1.70 [.067]	0.8mm² [18]
INSUL BARREL CRIMP			WIRE BARREL CRIMP			

THIS DRAWING IS A CONTROLLED DOCUMENT.

DIMENSIONS: mm [INCHES]

TOLERANCES UNLESS OTHERWISE SPECIFIED:

0 PLC	± –
1 PLC	± –
2 PLC	± 0.25 [.010]
3 PLC	± –
4 PLC	± –
ANGLES	± –

MATERIAL: 082 BRASS

FINISH: SEE TABLE

DWN	P FORTNEY	9/30/92
CHK	JR RUTH	9/30/92
APVD	G YETTER	9/30/92
PRODUCT SPEC	—	
APPLICATION SPEC	—	
WEIGHT	—	

Tyco Electronics

Tyco Electronics Corporation
Harrisburg, PA 17105-3608

NAME: RING

SIZE	CAGE CODE	DRAWING NO	RESTRICTED TO
A3	00779	C-63678	—

CUSTOMER DRAWING

SCALE	SHEET	REV
5:1	1 OF 1	D