MICRO SWITCH
FREEPORT, ILLINOIS, U S A
A DIVISION OF HONEYWELL
FED. MFG. CODE 91929

SWITCH-TOGGLE

CATALOG LISTING
14TL1-12 SERIES
CHART 1

THIS DRAWING COVERS A PROPRIETARY ITEM AND IS THE PROPERTY OF MICRO SWITCH, A DIVISION OF HONEYWELL. THIS DRAWING IS NOT TO BE COPIED OR USED WITHOUT THE APPROVAL OF MICRO SWITCH.

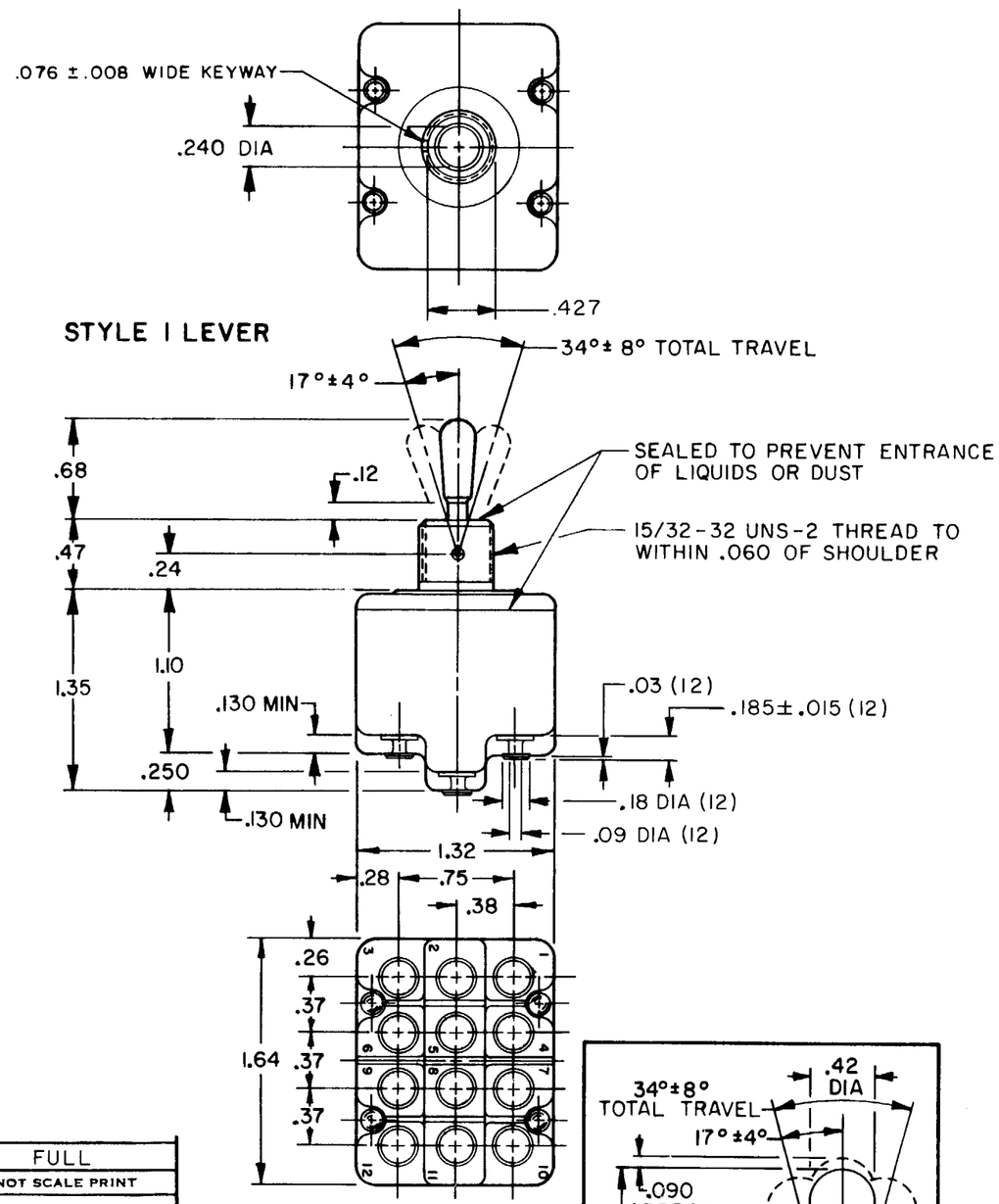

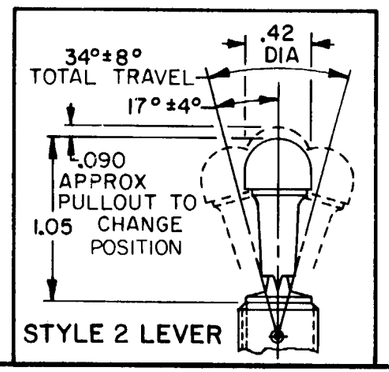

MS NUMBER	CATALOG LISTING	AVAILABLE LOCKING COMBINATIONS FOR CONFIGURATION SEE LETTERED DETAILS	STYLE NUMBER	CURRENT CAPACITY (AMPS) RESISTIVE LOAD DC VOLTS 28	125	250	AC VOLTS 125	250	LAMP LOAD 28 VDC	125 VAC	INDUCTIVE LOAD 28 VDC	125 VAC
27736-1	14TL1-12	NONE	1	20	.75	.5	15	6	5	4	12	15
27739-1	14TL1-12 (6)	A,B,D,E,F,G,H,J,K,L,M,N,P	2									

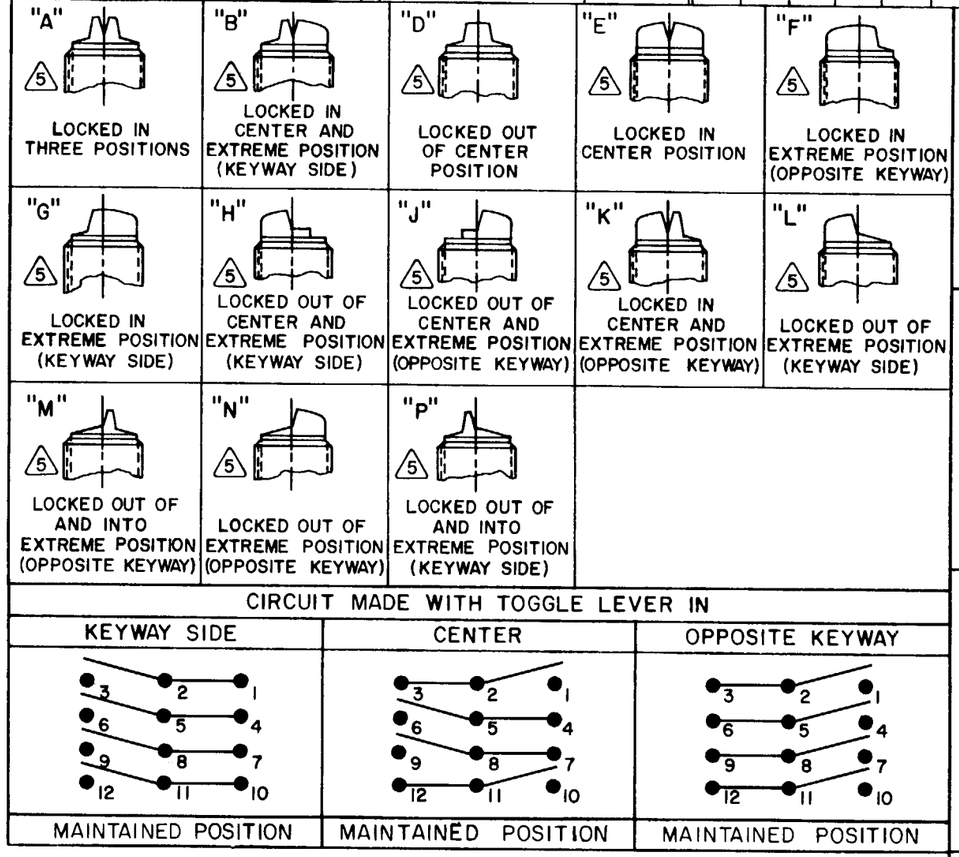

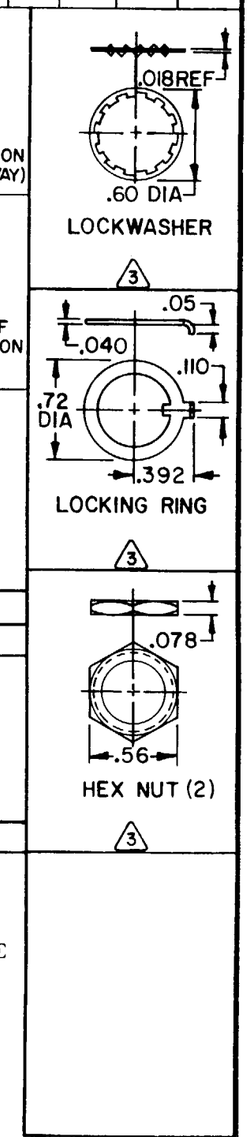

NOTES
1 - SWITCHES ARE CAPABLE OF WITHSTANDING A TEMPERATURE OF 160°F CONTINUOUSLY AT FULL RATED LOAD
2 - CIRCUIT DESIGNATION AND MICRO SWITCH CATALOG LISTING AND MS NUMBER STAMPED ON SIDE OF SWITCH
(3) FURNISHED UNASSEMBLED
4 - FOR TERMINAL COVER SEE MICRO SWITCH CAT. LIST. 5PA9
(5) KEYWAY SHOWN ON LEFT SIDE
(6) SUFFIX LETTER MUST BE ADDED FOR DESIRED TYPE OF TOGGLE LOCKING. SEE CHART FOR AVAILABLE LOCKING COMBINATIONS

SCALE FULL
DO NOT SCALE PRINT
UNLESS OTHERWISE NOTED
DIMENSIONS ARE IN INCHES
TOLERANCES ARE:

ONE PLACE	(.0)	±.030
TWO PLACE	(.00)	±.015
THREE PLACE	(.000)	±.005
ANGLES		±1°

WEIGHT

15A-125, 250 OR 277 VAC
1/2HP-125VAC; 1HP-250, 277VAC
5A-125VAC "L" CODE L191

CATALOG LISTING M 14TL1-12 SERIES CHART 1
ISSUE 3
PAGE 1 OF 1
RELEASE NO. PR-10969
REPLACES

REVISIONS
A CO-59379 DAW 16 MAY 86
B CO-94428 CSL 28 NOV 99

DRAWN J A P 23 FEB 82
FORMTEK