PART NAME	NEMA 4X DIE CAST ALUMINUM ENCLOSURE	PART No.	AN-1307, AN-1307-G, AN-2807 & AN-2807-B	REV. DATE	2-11-09

MATERIAL: ALUMINUM ALLOY #ADC-12

FINISH: NATURAL (NO SUFFIX)
GRAY (SUFFIX -G)
SMOOTH BLACK (SUFFIX -B)

NOTES:
1) SIX (6) M4 x 20mm (0.787") LG. SCREWS SUPPLIED FOR ASSEMBLY OF COVER TO BODY.
2) ALL HOLE DIAMETERS HAVE ±0.005 TOLERANCE
ALL OTHER DIMENSIONS HAVE ±0.015 TOLERANCE

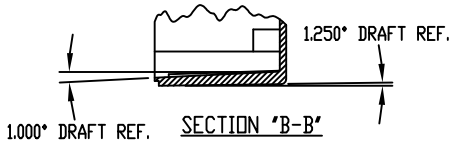

SECTION "B-B"

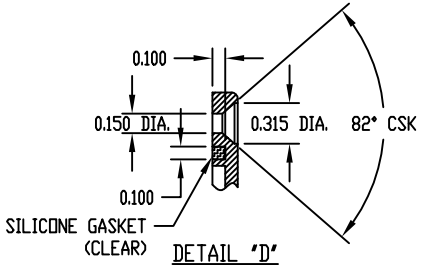

DETAIL "D"

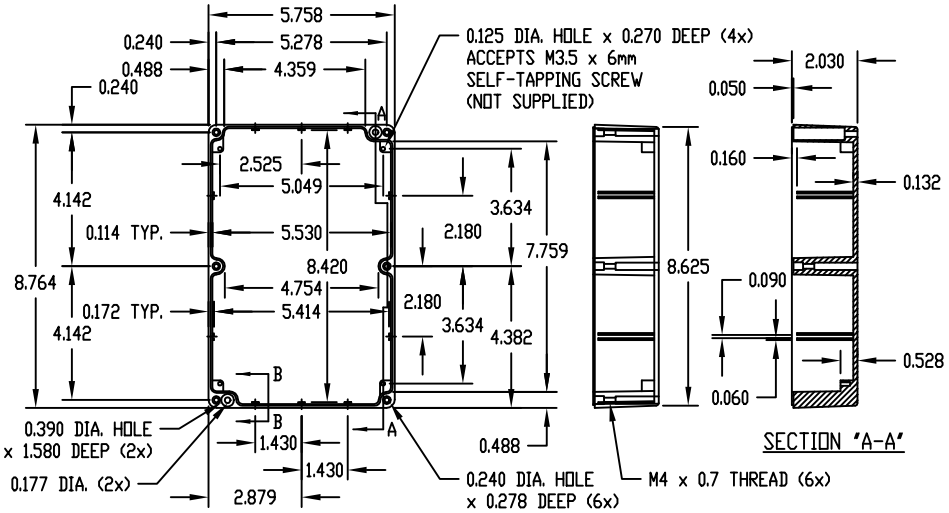

SECTION "A-A"

BODY

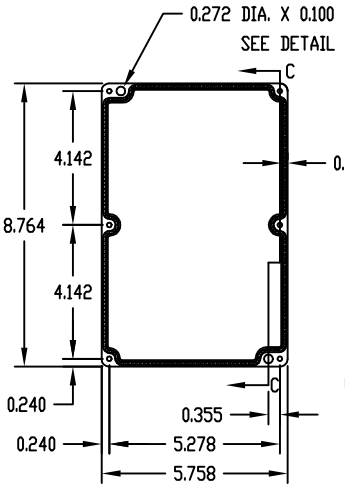

SECTION "C-C"

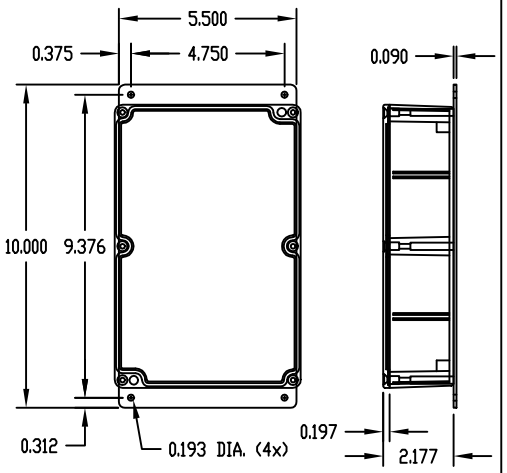

COVER

PART NO. AN-2807 & AN-2807-B ARE SUPPLIED WITH A WELDED ON MOUNTING BRACKET ONLY.