.100" [2.54 mm] Contact Centers, .610" [15.49 mm] Profile, .470" [11.94 mm] Wide Body, Dip Solder/Wire Wrap/Right Angle for .093" or .125" Mating PCB

SPECIFICATIONS

- Accommodates .093" ± .008" [2.36 mm ± 0.20 mm] or .125" ± .008" [3.18 mm ± 0.20 mm] mating PCB (Consult Factory for .031" ± .006" [0.79 mm ± 0.15 mm] PC Board)
- PBT, PPS or PA9T insulator
- Molded-in key available
- 3 Amps current rating for one contact energized
- 30 milli Ohms maximum at rated current
- UL Flammability Rating: 94V-0

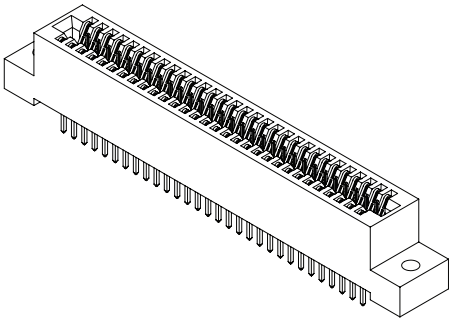

READOUT

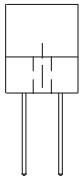

DUAL (D)

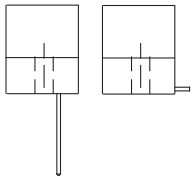

HALF LOADED (H)

TERMINATION TYPE

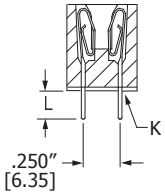

LOOP BELLOWS (RS, RM)

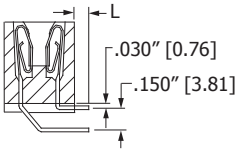

RIGHT ANGLE DIP SOLDER (TA, TB, TM)

TERMINATION TYPE		POST CROSS SECTION (K)	POST LENGTH L ±.025'[0.64]	FITS MIN. HOLE SIZE
RS	Dip Solder	.025" [0.64] SQ.	.190" [4.83]	.040" [1.02]
RM	Wire Wrap	.025" [0.64] SQ.	.560" [14.20]	.040" [1.02]
TA	Right Angle	.025" [0.64] SQ.	.100" [2.54]	.043" [1.09]
TB	Right Angle	.025" [0.64] SQ.	.180" [4.57]	.043" [1.09]
TM	Right Angle	.025" [0.64] SQ.	.250" [6.35]	.043" [1.09]

PCB LAYOUT

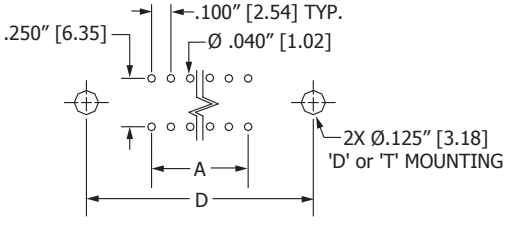

STRAIGHT PIN (RS, RM) TERMINATIONS

COMPONENT SIDE

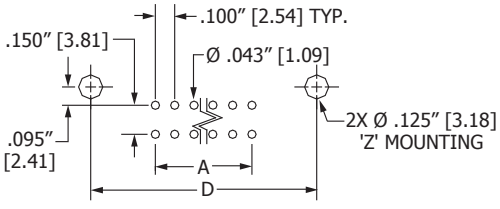

RIGHT ANGLE (TA, TB, TM) TERMINATIONS

MOUNTING STYLE

NO MOUNTING EARS (N)

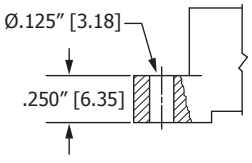

FLUSH MOUNTING (D)

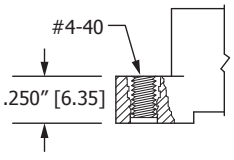

FLUSH MOUNTING WITH THREADED INSERT (T)

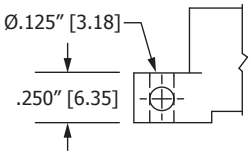

FLUSH MOUNTING WITH SIDE HOLES (Z)

.100" [2.54 mm] Contact Centers, .610" [15.49 mm] Profile, .470" [11.94 mm] Wide Body, Dip Solder/Wire Wrap/Right Angle for .093" or .125" Mating PCB

PART NUMBER OPTIONS

E B C 70 D RM D - S273

MATERIALS (INSULATOR/CONTACT)
- E = PBT/Phosphor Bronze
- R = PPS/Phosphor Bronze
- G = PA9T/Phosphor Bronze
- H = PBT/Beryllium Copper
- A = PPS/Beryllium Copper
- J = PA9T/Beryllium Copper

(Consult factory for other materials.)
Refer to Page 7 for Operating/Processing Temperatures

CONTACT FINISH - RoHS Compliant
All platings are Lead Free and have .000050" Nickel underplate

	Contact Surface	Termination
B =	.000010" Gold	.000100" Pure Tin, Matte
C =	.000030" Gold	.000100" Pure Tin, Matte
G =	.000010" Gold	.000005" Gold
Y =	.000030" Gold	.000005" Gold

	Contact Surface	Overall Plating
S =	.000010" Gold	.000010" Gold
M =	.000030" Gold	.000010" Gold
E =	.000100" Pure Tin, Matte	.000100" Pure Tin, Matte

MODIFICATION CODE (Consult Factory)
- -S273 = FOR .093" ± .008" [2.36 mm ± 0.20 mm] THICK MATING PCB
- -S664 = FOR .125" ± .008" [3.18 mm ± 0.20 mm] THICK MATING PCB

MOUNTING STYLE (Opposite Page)
- N = No Mounting
- D = Flush Mounting
- T = Flush Mounting With Threaded Inserts
- Z = Flush Mounting With Side Holes

TERMINATION TYPE (Opposite Page)
- RS = .025" [0.64 mm] Square Dip Solder
- RM = .025" [0.64 mm] Square Wire Wrap
- TA, TB, TM = .025" [0.64 mm] Square Right Angle

READOUT (Opposite Page)
- D = Dual
- H = Half Loaded

NUMBER OF CONTACT POSITIONS
See Chart Below

CONTACT CENTERS
- C = .100" [2.54 mm]

DIMENSIONS

Dimensions in [ ] are in millimeters, all others are in inches.

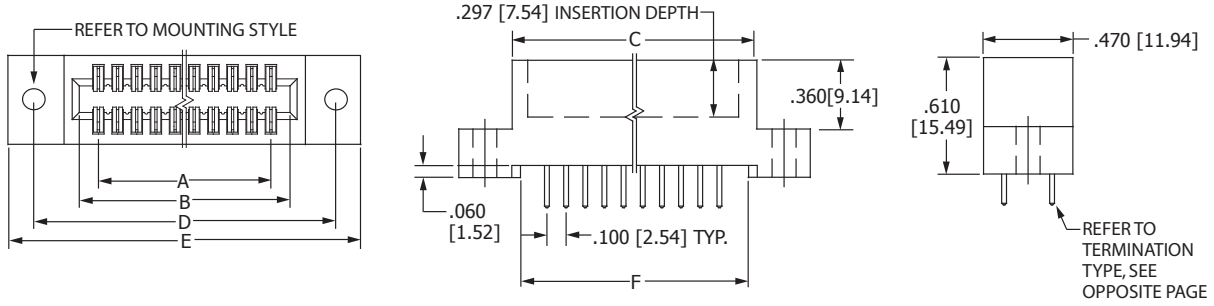

Tolerances on non-critical dimensions may very slightly due to shrinkage differential per insulator material; Consult factory.

POSITIONS/ CONTACTS	INCHES						MILLIMETERS					
	A±.008	B±.008	C±.015	D±.010	E±.020	F±.015	A±0.20	B±0.20	C±0.38	D±0.25	E±0.51	F±0.38
06/12	0.500	0.700	0.860	1.175	1.435	0.750	12.70	17.78	21.84	29.85	36.45	19.05
07/14*	0.600	0.800	0.960	1.275	1.535	0.850	15.24	20.32	24.38	32.39	38.99	21.59
08/16*	0.700	0.900	1.060	1.375	1.635	0.950	17.78	22.86	26.92	34.93	41.53	24.13
10/20	0.900	1.100	1.260	1.575	1.835	1.150	22.86	27.94	32.00	40.01	46.61	29.21
12/24	1.100	1.300	1.460	1.775	2.035	1.350	27.94	33.02	37.08	45.09	51.69	34.29
15/30*	1.400	1.600	1.760	2.075	2.335	1.650	35.56	40.64	44.70	52.71	59.31	41.91
17/34	1.600	1.800	1.960	2.275	2.535	1.850	40.64	45.72	49.78	57.79	64.39	46.99
18/36	1.700	1.900	2.060	2.375	2.635	1.950	43.18	48.26	52.32	60.33	66.93	49.53
20/40*	1.900	2.100	2.260	2.575	2.835	2.150	48.26	53.34	57.40	65.41	72.01	54.61
22/44	2.100	2.300	2.460	2.775	3.035	2.350	53.34	58.42	62.48	70.49	77.09	59.69
24/48*	2.300	2.500	2.660	2.975	3.235	2.550	58.42	63.50	67.56	75.57	82.17	64.77
25/50*	2.400	2.600	2.760	3.075	3.335	2.650	60.96	66.04	70.10	78.11	84.71	67.31
28/56	2.700	2.900	3.060	3.375	3.635	2.950	68.58	73.66	77.72	85.73	92.33	74.93
30/60	2.900	3.100	3.260	3.575	3.835	3.150	73.66	78.74	82.80	90.81	97.41	80.01
31/62*	3.000	3.200	3.360	3.675	3.935	3.250	76.20	81.28	85.34	93.35	99.95	82.55
35/70	3.400	3.600	3.760	4.075	4.335	3.650	86.36	91.44	95.50	103.51	110.11	92.71
36/72	3.500	3.700	3.860	4.175	4.435	3.750	88.90	93.98	98.04	106.05	112.65	95.25
40/80*	3.900	4.100	4.260	4.575	4.835	4.150	99.06	104.14	108.20	116.21	122.81	105.41
43/86	4.200	4.400	4.560	4.875	5.135	4.450	106.68	111.76	115.82	123.83	130.43	113.03
44/88*	4.300	4.500	4.660	4.975	5.235	4.550	109.22	114.30	118.36	126.37	132.97	115.57
49/98*	4.800	5.000	5.160	5.475	5.735	5.050	121.92	127.00	131.06	139.07	145.67	128.27
50/100	4.900	5.100	5.260	5.575	5.835	5.150	124.46	129.54	133.60	141.61	148.21	130.81
55/110	5.400	5.600	5.760	6.075	6.335	5.650	137.16	142.24	146.30	154.31	160.91	143.51
60/120*	5.900	6.100	6.260	6.575	6.835	6.150	149.86	154.94	159.00	167.01	173.61	156.21
61/122	6.000	6.200	6.360	6.675	6.935	6.250	152.40	157.48	161.54	169.55	176.15	158.75
65/130*	6.400	6.600	6.760	7.075	7.335	6.650	162.56	167.64	171.70	179.71	186.31	168.91
70/140	6.900	7.100	7.260	7.575	7.835	7.150	175.26	180.34	184.40	192.41	199.01	181.61

* Consult factory for availability.