DRAWING MADE IN THIRD ANGLE PROJECTION

THIS DRAWING IS UNPUBLISHED. RELEASED FOR PUBLICATION ,19 .

© COPYRIGHT 19 BY AMP INCORPORATED. ALL INTERNATIONAL RIGHTS RESERVED.

LOC	DIST
BD	26

P	F	ZONE	LTR	DESCRIPTION	DATE	APPD
			O	RLSE PER NPR 2674 & REV PER ECN BD3723	02/15/90	–
			A	REV PER EC 0020-824-95	12 OCT 95	JH
			B	REV PER EC 0410-95-96	04 MAR 97	JGH
			C	REV PER EC 0410-281-97	29 SEP 97	JGH
			D	REV PER EC 0410-410-97	05 FEB 98	JGH

REVISIONS

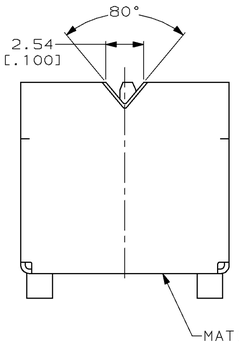

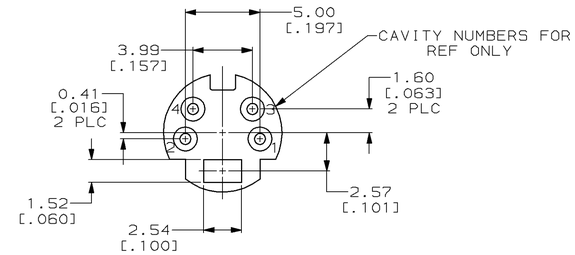

DETAIL D

1. SHIELD & CONTACTS: COPPER ALLOY.
   HOUSING: POLYESTER, UL 94V-0 RATED, BLACK.
2. 0.76 µm [.000030] MIN GOLD FOR A LENGTH OF 1.27 [.050] MIN FROM MATING END, 3.05 µm [.000120] MIN TIN-LEAD ON OPPOSITE END, BOTH OVER 1.27 µm [.000050] MIN NICKEL.
3. 1.50-4.00µm[.000059-.000158] THICK BRIGHT TIN.
4. GOLD PLATING PER MIL-G-45204, TIN PLATING PER MIL-T-10727, NICKEL PLATING PER QQ-N-290.
5. DATUMS AND BASIC DIMENSION SUPPLIED BY CUSTOMER.

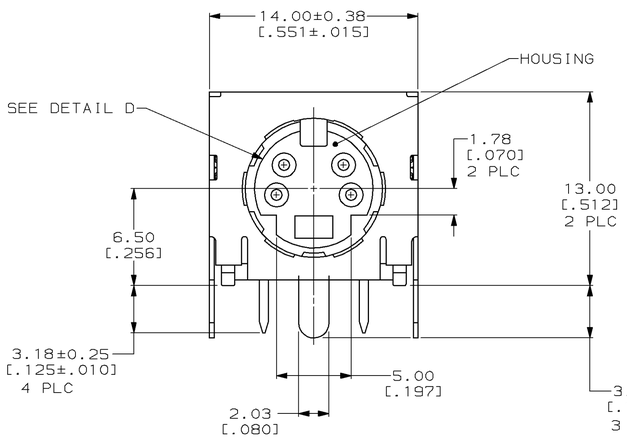

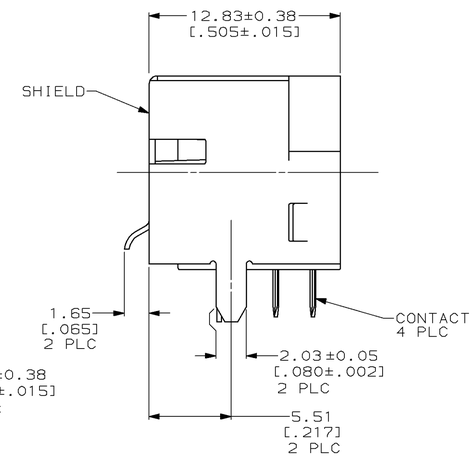

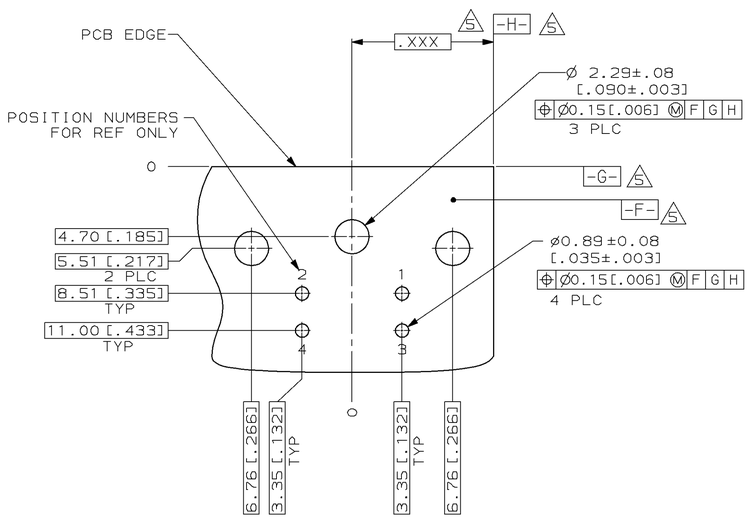

RECOMMENDED PC BOARD LAYOUT

BOTTOM VIEW

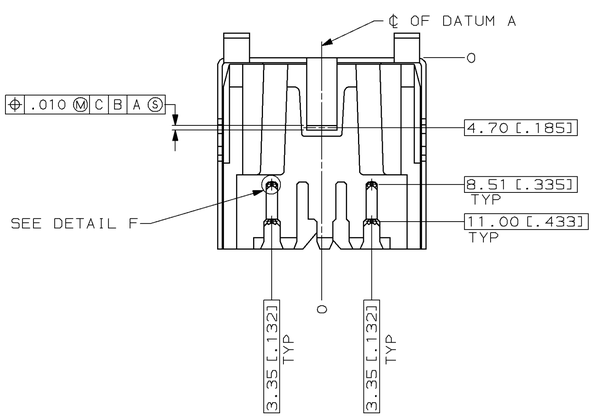

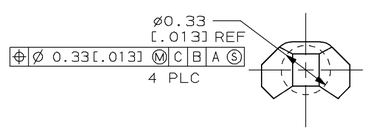

DETAIL F
SCALE 50:1

750069-1

PART NO

DO NOT SCALE PRINT. UNLESS SPECIFIED DIMENSIONS IN mm [INCHES] TOLERANCES ON : 2 PLC DEC ± 0.13 [.005] 3 PLC DEC ± – ANGLES ± 2°	DR 02/15/90 L.SIPE	AMP INCORPORATED Harrisburg, Pa. 17105
	CHK 03/20/90 R.STONE	NAME RECEPTACLE ASSEMBLY, FRONT PANEL GROUNDING, 4 POSN, RIGHT ANGLE, MINIATURE CIRCULAR DIN
MATERIAL 1	APPD 03/20/90 R.WHYNE	
	APPD 03/20/90 J.FULPONI	
	PRODUCT SPEC 108-1225	
FINISH 4 SHIELD: 3 CONTACTS: 2	APPLICATION SPEC –	SIZE D / CAGE CODE 00779 / DRAWING NO 750069
	WEIGHT –	SCALE 5:1 / SHEET 1 OF 1

CUSTOMER DRAWING

AMP 17756-3 REV 6-89

05-FEB-98 15:19:53 cmp34723 /home/smrv0266/ddd04/dsp14023/cmp34723/admmod