THIS DRAWING IS UNPUBLISHED. RELEASED FOR PUBLICATION ,19 .
© COPYRIGHT 19 BY AMP INCORPORATED. ALL RIGHTS RESERVED.

LOC	DIST
AJ	16

REVISIONS

P	LTR	DESCRIPTION	DATE	DWN	APVD
	BH	REVISED PER EC 0S14-0288-02	18DEC02	DD	KW
	BH1	REVISED PER ECO-09-020935	09SEP09	KK	AEG

1. BRASS PER QQ-B-626.
2. BERYLLIUM COPPER PER ASTM-B-196
3. NYLON PER ASTM-D-4066,BLACK.
4. POLYMETHYLPENTENE GENERAL PURPOSE,NATURAL.
5. 0.00076[.000030] MINIMUM GOLD PER MIL-G-45204.
6. 0.00254[.000100] MINIMUM GOLD PER MIL-G-45204.
7. RG-180/U, RG-180A/U, RG-195/U, AND 21-597.
8. RG-58/U, RG-58A/U, RG-58B/U, AND RG-58C/U.
9. RG-55/U, RG-55A/U, RG-55B/U, RG-141/U, RG-142/U, AND RG-223/U.
10. BRAND REX T-209A.
11. SEE IS 1770.
12. NYLON PER ASTM-D-4066, NATURAL
13. DIELECTRIC MATERIAL: VALOX 325, WHITE
14. OBSOLETE PARTS: OBSOLETE CIS STREAMLINING PER D.RENAUD/D.SINISI

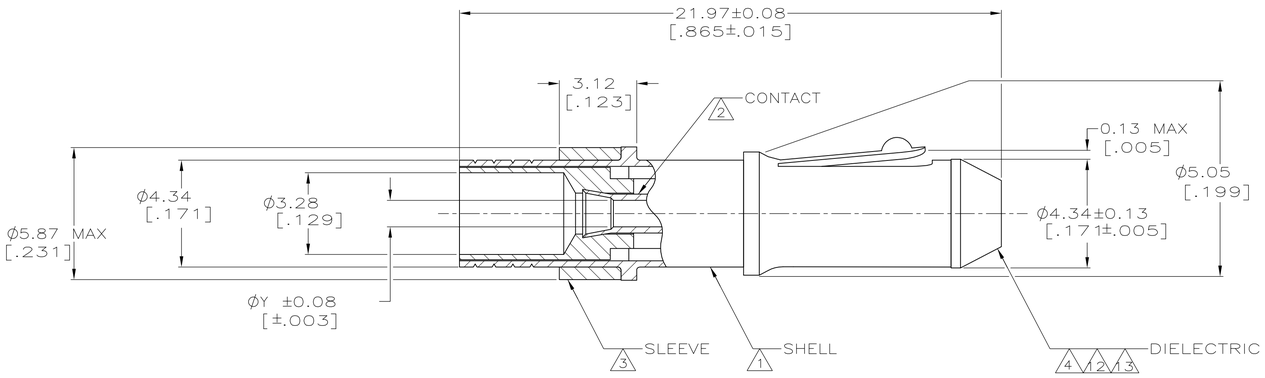

	CONTACT PLATING	SHELL PLATING	WEIGHT	CABLE SIZE	CRIMP TOOL	Y	(3) FERRULE QTY=1	(2) SPRING RETENTION QTY=1	(1) PIN ASSY QTY=1	PART NUMBER
13 OBSOLETE	5	5	.030 OUNCES	–	–	1.07[.042]	–	–	–	2-201145-7
12 OBSOLETE	5	5	.030 OUNCES	–	–	1.07[.042]	–	–	–	2-201145-6
OBSOLETE	6	6	.030 OUNCES	–	–	0.58[.023]	–	–	–	1-201145-0
OBSOLETE	5	5	.030 OUNCES	–	–	0.81[.032]	–	–	–	201145-8
	5	5	.030 OUNCES	–	–	1.07[.042]	–	–	–	201145-4
	5	5	.030 OUNCES	–	–	0.58[.023]	–	–	–	201145-2
14 OBSOLETE	5	5	.030 OUNCES	–	–	1.07[.042]	–	–	–	201145-1

THIS DRAWING IS A CONTROLLED DOCUMENT.

DIMENSIONS: mm[INCHES]

TOLERANCES UNLESS OTHERWISE SPECIFIED:
0 PLC ±-
1 PLC ±-
2 PLC ±-
3 PLC ±0.20[.008]
4 PLC ±-
ANGLES ±-

MATERIAL: SEE NOTES
FINISH: SEE NOTES

DWN J. LIPPERT 08 JAN 90
CHK M. SNEED 23 FEB 90
APVD B. ADAMS 23 FEB 90
PRODUCT SPEC 108-12021
APPLICATION SPEC –
WEIGHT –

AMP TYCO Electronics Harrisburg, PA 17105-3608

NAME PIN, MINIATURE SERIES

SIZE A1 | CAGE CODE 00779 | DRAWING NO C-201145 | RESTRICTED TO –

CUSTOMER DRAWING | SCALE 8:1 | SHEET 1 OF 1 | REV BH1