FO-55112-B

HONEYWELL PART NUMBER
1HE49
FAA-PMA △4

REV	DOCUMENT	CHANGED BY	CHECK
10	0006859	DVM 28JUL04	AK

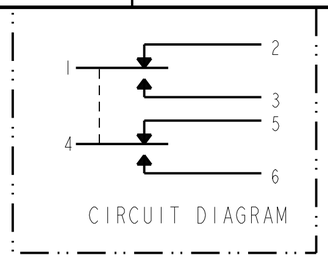

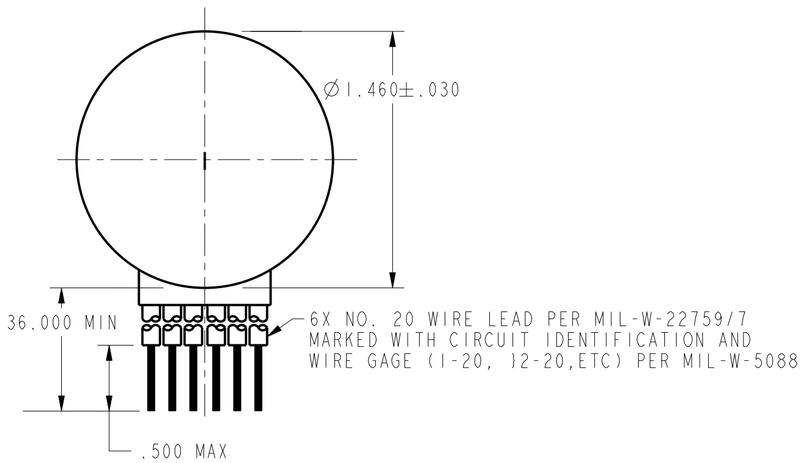

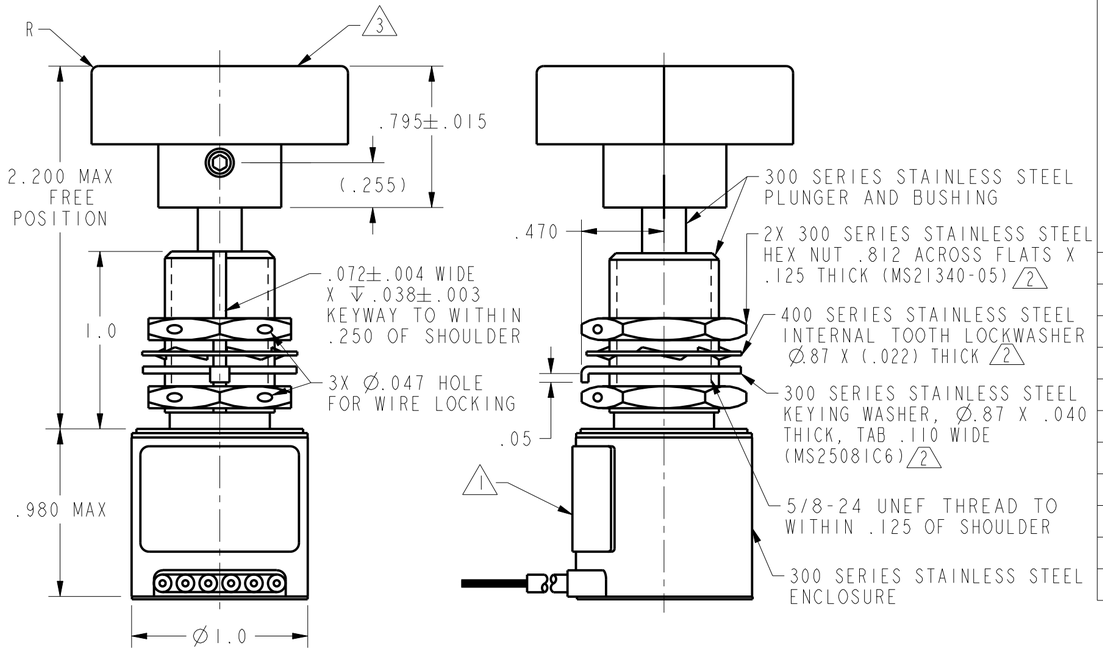

SPECIFICATION DETAILS:	
STANDARD:	SWITCH CONFORMS TO MIL-PRF-8805/80-01 EXCEPT AS NOTED
CONSTRUCTION:	
ENCLOSURE DESIGN	HERMETIC SEAL PER MIL-PRF-8805, SYMBOL 5
CONTACT MATERIAL & CONFIGURATION	SMOOTH SILVER CONTACTS
CIRCUIT CONFIGURATION	2X S P D T
TERMINATION	LEADWIRES PER MIL-W-22759/7
WEIGHT	9.1 OZ MAX
ELECTRICAL CHARACTERISTICS:	
MAXIMUM ELECTRICAL RATINGS -SEA LEVEL	VOLTAGE: 30 VDC; RESISTIVE: 5.0 AMP; INDUCTIVE: 3.0 AMP; MOTOR: 4.0 AMP
DIELECTRIC STRENGTH & INSULATION RESISTANCE	DIELECTRIC STRENGTH (60 Hz FOR 5 SECONDS); INSULATION RESISTANCE (500 VDC ±10%)
-BETWEEN TERMINALS AND EXPOSED NON-CURRENT CARRYING METAL	1000 V Rms, 500 μA (MAX LKG); 1000 MEGOHM MIN
-BETWEEN TERMINALS OF MUTUALLY INSULATED CIRCUITS	" "
-BETWEEN ALL UNCONNECTED TERMINALS OF THE SAME POLE	" "
SWITCH RESISTANCE	N/A
RECOMMENDATION FOR USE IN APPLICATIONS LESS THAN .5 amps AND/OR 12 volts	NO
MECHANICAL CHARACTERISTICS:	
OPERATING FOCE	6-12 LBS
RELEASE FORCE	4 LBS MIN
FULL OVERTRAVEL FORCE	30 LB MAX
PRETRAVEL	.040 MAX
DIFFERENTAL TRAVEL	.020 MAX
FREE POSITION	2.200 MAX
COINCIDENCE OF OP & REL POINT	.010 MAX OF PLUNGER TRAVEL
OVERTRAVEL	.250 MIN
TOTAL TRAVEL	.265 MIN
MOUNTING STRENGTH	30 IN-LBS MAX WILL NOT CAUSE SWITCH DAMAGE
ACTUATOR STRENGTH	30 LBS APPLIES IN A DIRECTION TO CAUSE SWITCH ACTUATION
LIFE:	
MECHANICAL LIFE	100,000 MIN PER MIL-PRF-8805/80
ELECTRICAL LIFE AT FULL RATED LOAD	25,000 MIN PER MIL-PRF-8805/80
ENVIRONMENTAL: (BUTTON NOT INCLUDED)	
TEMPERATURE RANGE	-55° C (-65° F) TO +125° C (257° F)
ALTITUDE RANGE	SEA LEVEL TO 100,000 FEET
SHOCK	PER MIL-PRF-8805 (200g)
VIBRATION	PER MIL-PRF-8805 SYMBOL 2 (10-2000 Hz, 20g)
MOISTURE RESISTANCE	PER MIL-PRF-8805 (10 DAY TEST)
THERMAL SHOCK	PER MIL-PRF-8805 (5 CYCLE TEST)
SALT SPRAY	PER MIL-PRF-8805 (96 HOUR TEST)

NOTES

△1 CIRCUIT DIAGRAM, CATALOG LISTING, FSCM CODE, MICRO SWITCH, FAA-PMA AND DATE CODE SHOWN ON SWITCH

△2 HARDWARE MAY BE PACKAGED UNASSEMBLED PER MIL-PRF-8805, REPLACEMENT PACKAGE: 19PA8

△3 RED NYLON BUTTON AND 8-32UNC-2A X (.125) ZINC-COBALT PLATED SET SCREW FURNISHED UNASSEMBLED. MAX SET SCREW TORQUE VALUE 2 IN-LBS. REPLACEMENT PACKAGE: 15PA293

△4 FOR MANUFACTURING DETAIL SEE ASSEMBLY DRAWING 1HE49 FOR FAA-PMA

DESIGN UNITS: INCH
TOLERANCES UNLESS NOTED:

NO PLACE	X	±	
ONE PLACE	.X	±	.030
TWO PLACE	.XX	±	.015
THREE PLACE	.XXX	±	.005
FOUR PLACE	.XXXX	±	
ANGLES	X	±	

THIRD ANGLE PROJECTION

DRAWN	TSM	01NOV00
CHECK	SAV	01NOV00

THIS DRAWING COVERS A PROPRIETARY ITEM AND IS THE PROPERTY OF HONEYWELL. THIS DRAWING IS NOT TO BE COPIED OR USED WITHOUT THE PERMISSION OF HONEYWELL.

INTERPRET PER ANSI Y14.5 M-1982 OTHER HONEYWELL ENGINEERING STANDARDS MAY APPLY

Pro/ENGINEER 2D

Honeywell

TITLE: SWITCH - ENCLOSED

SIZE	TYPE	DRAWING NAME	REV
C	1	1HE49	10

SCALE 1.5:1 SHEET 1 OF 1