PART NAME	HAND HELD ENCLOSURE (STYLE B)	PART No.	HH-3420 & HH-3420-BC

MATERIAL: HIGH-IMPACT ABS (RATED UL94-V0)
COLOR: LIGHT GRAY

SUFFIX -BC UNITS TO HAVE BATTERY COMPARTMENT ONLY
ALL DIMENSIONS HAVE ±0.015 TOLERANCE
SIX (6) M3 x 1.173" LG. SCREWS SUPPLIED FOR ASSEMBLY

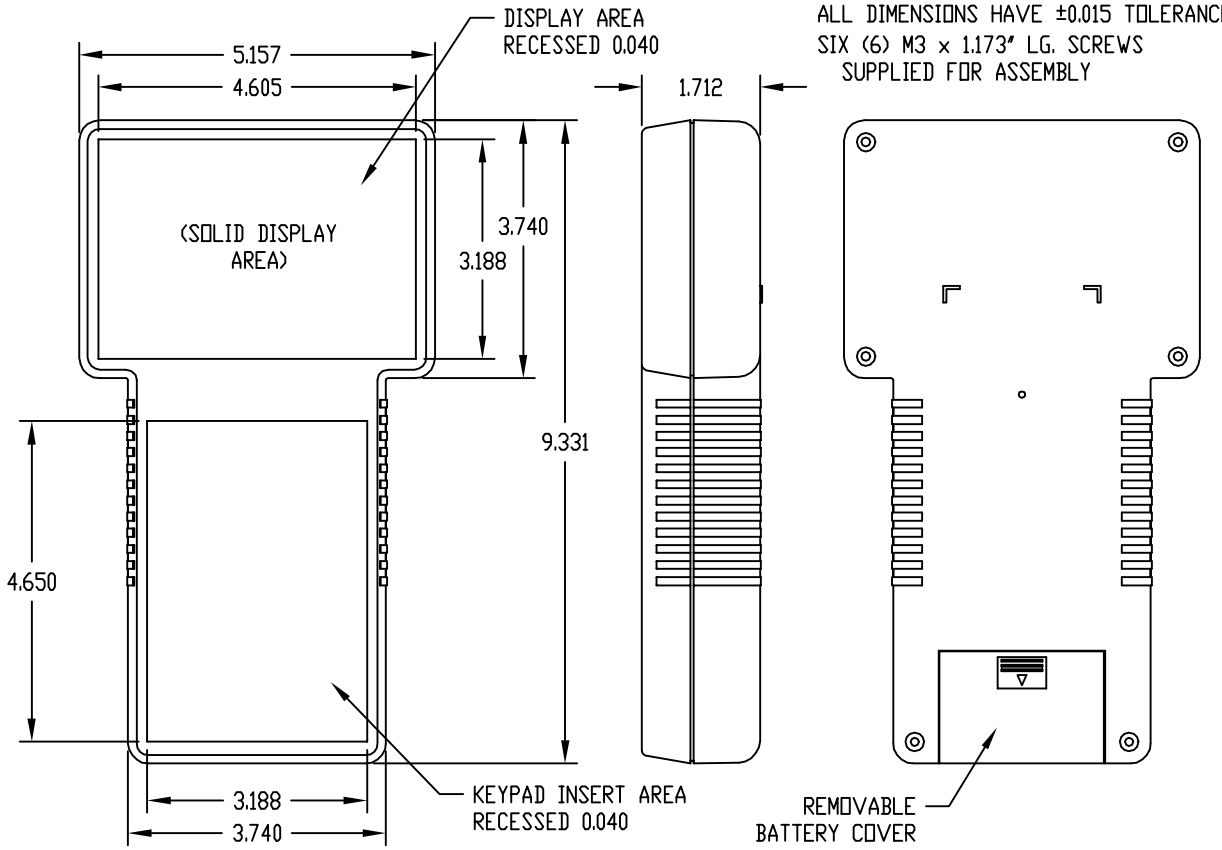

NOTE: MOUNTING BOSSES USE EITHER M2.5 METRIC OR #4 STD. SHEET METAL SCREWS x 0.250" LG. (NOT SUPPLIED)

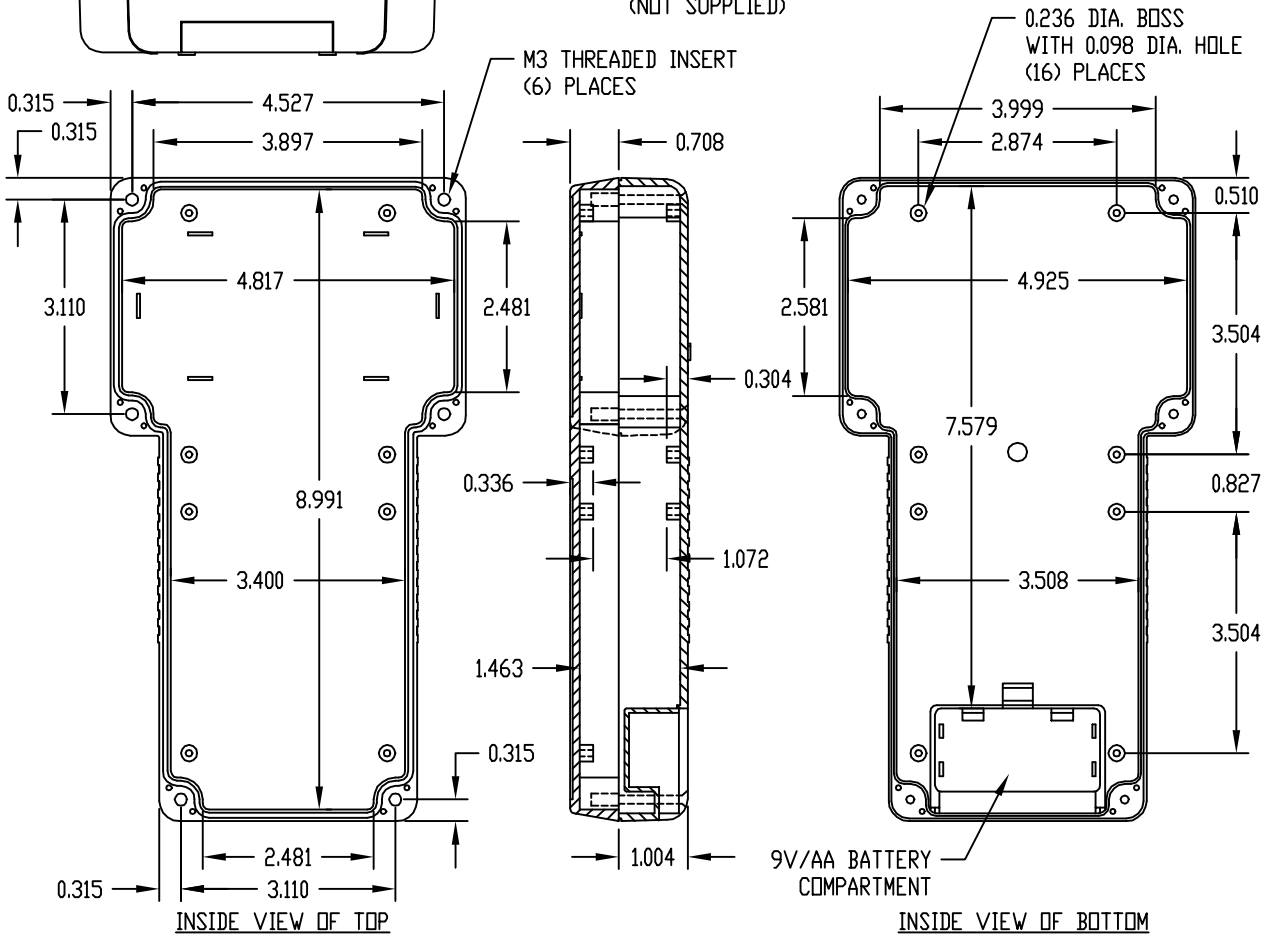

INSIDE VIEW OF TOP

INSIDE VIEW OF BOTTOM