THIS DRAWING IS UNPUBLISHED. RELEASED FOR PUBLICATION 2013
© COPYRIGHT 2013 BY TE CONNECTIVITY. ALL RIGHTS RESERVED.

LOC	DIST
-	-

REVISIONS

P	LTR	DESCRIPTION	DATE	DWN	APVD
	D	REVISED AND REDRAWN PER E.O. P15773	12OCT1998	-	RDR
	E	REVISED PER E.O. P16237	22SEP1999	-	RDR
	F	REVISED PER E.O. P21133	29SEP2011	-	RDR
	F1	REVISED PER ECO-14-002953	29JAN2014	PV	DM

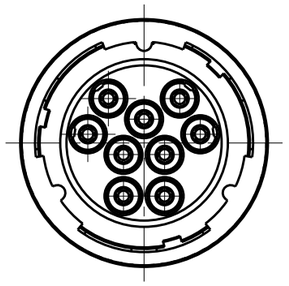

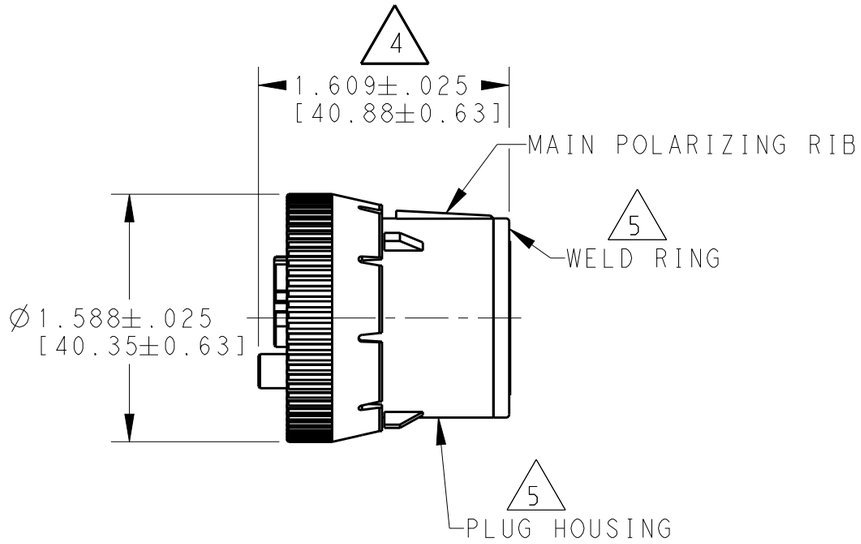

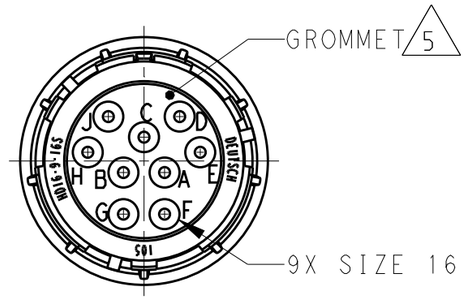

5. MATERIAL:
PLUG HOUSING AND WELD RING: PA 15%GF (GREY)
GROMMET: SILICONE (RED)

4. OVERALL DIMENSION DOES NOT INCLUDE RUBBER GROMMET.

3. THIS PLUG MATES WITH FOLLOWING
(X=SEAL TYPE,XXXX= ALL MODIFICATIONS).
HD16-9-16PX-XXXX
HD14-9-16PX-XXXX

2. SEE DRAWING 0425-015-0000 FOR CONTACT AND WIRE PERFORMANCE AND APPLICATION CHARACTERISTICS..

1. SEE TABLE FOR USABLE WIRE RANGE AND INSULATION RANGE.

CONTACT SIZE	MINIMUM O.D.	MAXIMUM O.D.	WIRE RANGE [mm²] 2
16	.100 [2.54]	.150 [3.81]	14-20 AWG [2.0-.50]

NOTES:

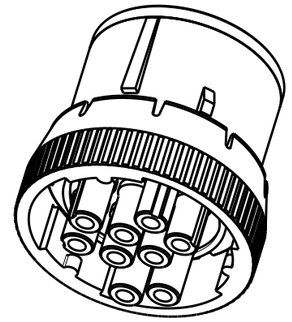

3D VIEW

THIS DRAWING IS A CONTROLLED DOCUMENT.

DIMENSIONS: INCHES[mm]

TOLERANCES UNLESS OTHERWISE SPECIFIED:
0 PLC ±-
1 PLC ±
2 PLC ±
3 PLC ±.025
4 PLC ±
ANGLES ±0° 30′0″

MATERIAL 5

FINISH -

DWN R.OCHOA 2SEP1998
CHK I.GRANTCHAROVA 18SEP2013
APVD D.MEYER 19SEP2013
PRODUCT SPEC -
APPLICATION SPEC -
WEIGHT 33.45 (g)

TE Connectivity

NAME PLUG CONNECTOR
HD10 SERIES ARR. 9-16
COLOR: GREY

SIZE	CAGE CODE	DRAWING NO	RESTRICTED TO
A3	00779	C-HD16-9-16S	-

Customer Drawing

SCALE 1:1 SHEET 1 OF 1 REV F1

1470-19 (3/11)