Dimension

DIM A	Nx5.08
DIM B	(N-1)x5.08

N=Number of poles

POLES	TOL
2p-6p	±0.15
7p-12p	±0.25
13p-16p	±0.35
17p-24p	±0.40

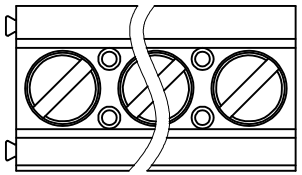

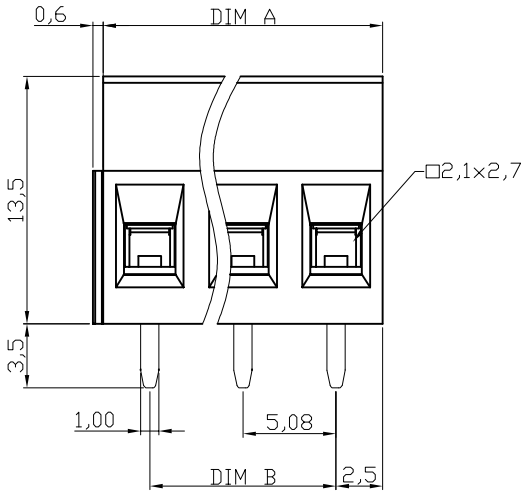

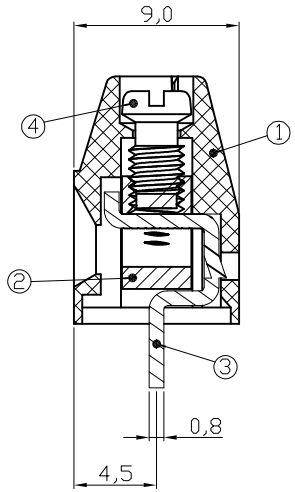

N=Number of contacts

Material

Item 1 Terminal housing:Thermoplastic UL94V-0, Green
Item 2 Clamp: Brass ,Ni plated
Item 3 Wire guard solder pin: Brass ,Tin plated
Item 4 Terminal screw: Steel Zinc plating"-'slot type

Electrical cULus/ FIMKO
Voltage rating: 300VAC/300VAC
Current rating: 16A/17.5A
Wire range: 0.5~1.5mm²
Solid wire(AWG): 12~28
Stranded wire(AWG): 12~28
Torque: 3.5Lb-In./0.5N.m
Screw: M3
Wire strip length: 6-7mm
Withstanding Voltage: 1.6KV/2.5KV
Operating temperature: -40°C to +115°C
Soldering temperature: 250°C±10°C/5Sec
Safety Approval:

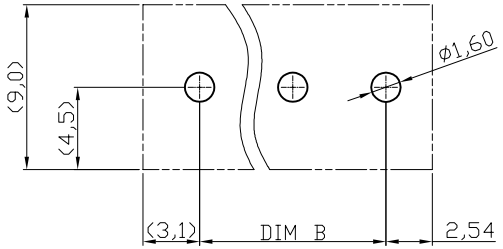

RoHS compliant

③ File No.: E349947

Scale	1:1						Date	Name
TOLERANCE						Drawn	10.12.2009	Dean
X.	±0.50					Approved	19.04.2016	Winnie
X.X	±0.30							
X.XX	±0.10	③	Add the UL File No.	19.04.2016	Winnie			
DIM	TOL	②	Modify drawing	19.04.2010	Dean			
X.°	±1°	①	Drawn	10.12.2009	Dean			
Angle	TOL	Id.	Modification	Date	Name			

ASSMANN WSW components

Customer-No.

ASSMANN WSW-No.
A-TB508-VIxxH

Drawing-No.
ASS 3927 CO

rev03

Replace

Sheet