THIS DRAWING IS UNPUBLISHED. RELEASED FOR PUBLICATION – ,N/A .
© COPYRIGHT N/A By – ALL RIGHTS RESERVED.

LOC	DIST
—	—

REVISIONS

P	LTR	DESCRIPTION	DATE	DWN	APVD
	R	REVISED PER ECO-15-016062	10NOV15	KG	CD

1. THIS RCPT. IS DESIGNED TO CONFORM TO THE LATEST ISSUE OF MIL-C-24308.
2. MAX WIRE INSUL TO BE USED WITH THIS RCPT IS .068 DIA.
3. STAINLESS STEEL RETENTION CLIPS ARE INCLUDED IN INSERTS.
4. THIS RCPT. WILL ACCEPT SIZE 20 SOCKET CONTACT M39029/63-368 OR ANY TYCO HD-20 SOCKET CONTACT. CONTACTS ORDERED SEPARATELY.

5. TYCO PART NO. MARKED ON CONNECTOR REPRESENTS KIT NUMBER WITH CONTACTS.

6. UL/CSA DESIGNATION STAMPED IN THIS AREA, OPTIONAL.

7. FINISH: CADMIUM PER QQ-P-416.

8. FINISH: BRIGHT TIN PER ASTM-B-545 .000400-.000550 THK OVER COPPER PER AMS2418 .000050 MIN THK.

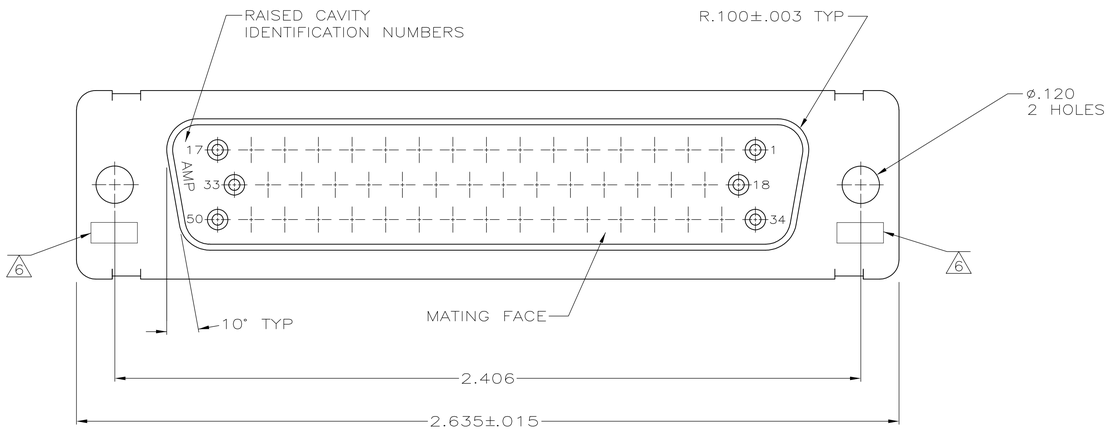

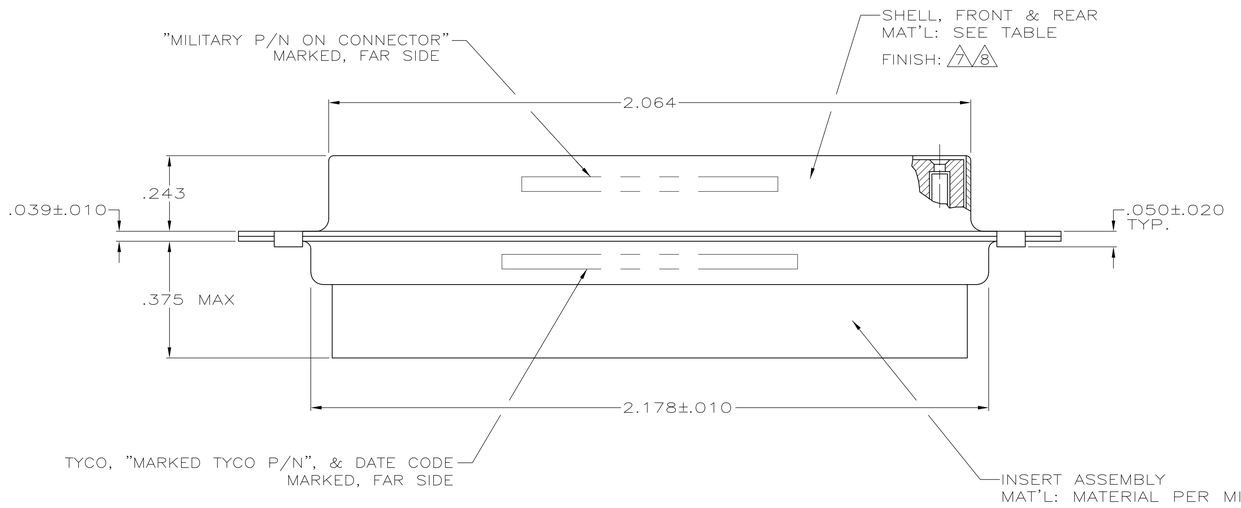

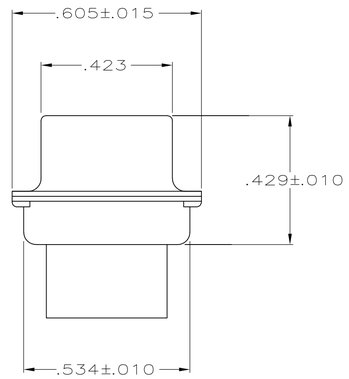

	MILITARY P/N ON PACKAGE	MILITARY P/N ON CONNECTOR	TYCO P/N ON CONNECTOR	REMARKS	SHELL FINISH	SHELL MAT'L	PART NO.
	–	–	205169-4	–	8	STEEL PER ASTM-A-109	205169-4
SUPSD BY 206805-2	–	–	–	–	–	BRASS	205169-2
	M24308/2-285F	M24308/2-5F	205563-2	5	7	STEEL PER ASTM-A-109	205169-1

THIS DRAWING IS A CONTROLLED DOCUMENT.

DIMENSIONS: INCHES

TOLERANCES UNLESS OTHERWISE SPECIFIED:
0 PLC ± –
1 PLC ± –
2 PLC ± –
3 PLC ± .005
4 PLC ± –
ANGLES ± 0°30'

MATERIAL: SEE CALLOUTS
FINISH: SEE CALLOUTS

DWN 27-May-15 MANJUNATH G M
CHK 27-May-15 CHARLES THOMAS
APVD 27-May-15 CHARLES THOMAS
PRODUCT SPEC —
APPLICATION SPEC —
WEIGHT —

TE Connectivity

NAME: AMPLIMITE RCPT FOR SOCKET CONTACTS HI-DENSITY HD-20 CONNECTOR SIZE 5 (50 POSN) SERIES 109

SIZE	CAGE CODE	DRAWING NO	RESTRICTED TO
A1	00779	C-205169	—

CUSTOMER DRAWING | SCALE 4:1 | SHEET 1 OF 1 | REV R

4805 (3/11)