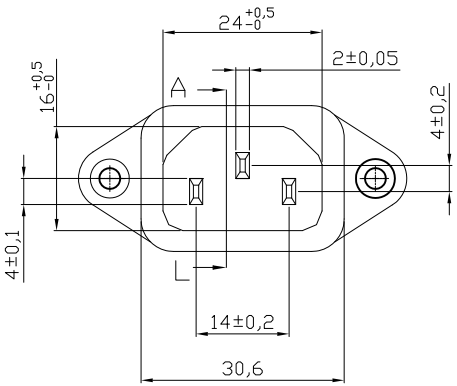

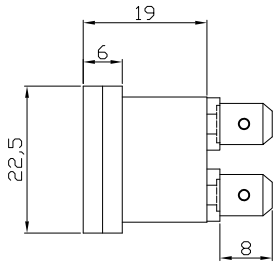

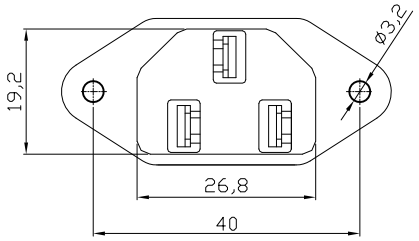

NOTES:

1.Insulator: PBT UL94V-0
2.Soldering: PIN Brass STRIP 0.8x3T TIN PLATING
3.Contact : Brass STRIP 2x4 TIN PLATING
4.Electrical: 10A/15A 250V~
5.Approval: UL, CSA, VDE, SEMKO, NEMKO, DEMKO, FIMKO, CCC, KTL

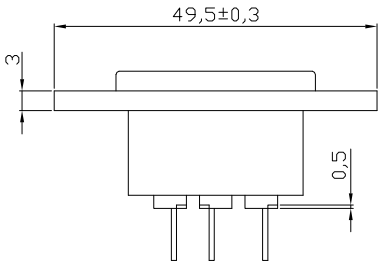

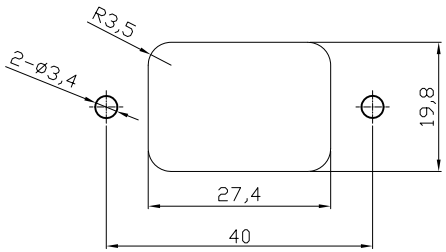

PANEL CUT-OUT

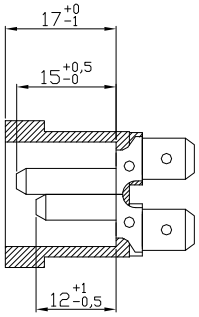

SECTION. AL

RoHS compliant

Scale	1:1						Date	Name
TOLERANCE						Drawn	08.07.2009	N.Schulz
0-10	±0.1					Approved	08.07.2009	Hellwig
10-30	±0.3							
30-100	±0.5							
DIM	TOL							
		1	Drawn	08.07.2009	Dean			
UNIT	mm	Id.	Modification	Date	Name			

Customer-No.

ASSMANN WSW-No.
A-KGS-F/T2N

Drawing-No.
ASS 0889M CO

rev01

Replace

SHEET

ASSMANN WSW components