Part Number: 52207-1051

FFC/FPC Connector, Right-Angle, Surface Mount, ZIF, Top Contact Style Receptacle, 10 Circuits, Gold (Au) Contact Plating, High Barrier Packaging

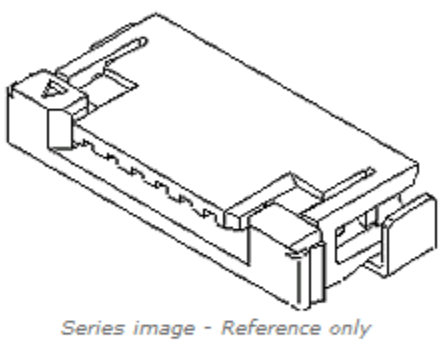

Series image - Reference only

Status:	**OBSOLETE**
Replacement:	52207-1060
Series:	52207
Category:	FFC/FPC Connectors
Overview:	FFC-FPC (SMT)

Go to **Part Detail**▼

CHECK DISTRIBUTOR INVENTORY

Add to My Parts

Email this page

Mates With Part(s):
Molex Premo-Flex FFC. Be sure to match like plating

Application Tooling

FAQ

Tooling specifications and manuals are found by selecting the products below.

Crimp Height Specifications are then contained in the Application Tooling Specification document.

Previously Available Application Tooling
Check our list of old tooling that used to be available for this part

Product Environmental Compliance

EU ELV:Product not active

EU RoHS:Product not active

EU RoHS Phthalates:Product not active

China RoHS:

REACH SVHC:Product not active

Low-Halogen Status:Product not active

EU RoHS Certificate of Compliance (PDF)

Multiple Part Product Compliance Statements
EU RoHS, REACH SVHC, & Low-Halogen

Multiple Part Industry Compliance Documents

*IPC 1752A Class C
*IPC 1752A Class D
*Molex Product Compliance Declaration

Questions on Product Environmental Compliance? EmailProductCompliance@molex.com

Request Molex's CMRT from conflictminerals@molex.com

Part Detail

COLLAPSE ALL

General

Status	**Obsolete**
Category	FFC/FPC Connectors
Series	52207
Overview	FFC-FPC (SMT)
Product Name	N/A
UPC	883906262013

Physical

Circuits (Loaded)	10
Color - Resin	Natural
Contact Position	Top
Durability (mating cycles max)	30
Entry Angle	90° Angle
Flammability	94V-0
Mated Height	2.70mm
Material - Metal	Phosphor Bronze
Material - Plating Mating	Gold
Material - Plating Termination	Tin
Material - Resin	Nylon
Net Weight	428.620/mg
Number of Rows	1
Orientation	Right Angle
PC Tail Length	2.00mm
PCB Locator	No
PCB Retention	Yes
Packaging Type	Embossed Tape on Reel
Pitch - Mating Interface	1.00mm
Pitch - Termination Interface	1.00mm
Polarized to PCB	Yes
Stackable	No
Temperature Range - Operating	-30°C to +85°C
Termination Interface: Style	Surface Mount
Wire/Cable Type	FFC/FPC

Electrical

(Please review the Product Specification for specific details.)	
Current - Maximum per Contact	1.0A
Voltage - Maximum	125V

Agency Certification

Please find UL Certificates by searching the UL Database using the Molex Series Number. Click here to visit the UL Database	
CSA	LR19980
UL	E29179

Molex is a registered trademark of Molex, LLC in the United States of America and may be registered in other countries; all other trademarks listed herein belong to their respective owners.

© Copyright 2017