THIS DRAWING IS UNPUBLISHED.
VERTRAULICHE UNVEROEFFENTLICHTE ZEICHNUNG
© COPYRIGHT 2014 Tyco Electronics AMP GmbH
RELEASED FOR PUBLICATION 2014
FREI FUER VEROEFFENTLICHUNG
ALL RIGHTS RESERVED.
ALLE RECHTE VORBEHALTEN.

MATED WITH:
PASSEND ZU:

PROJEKT NR.: PRJ-14-000000805

REVISIONS
AENDERUNGEN

P	LTR	DESCRIPTION BESCHREIBUNG	DATE	DWN	APVD
	A2	ADDED PCB LAYOUT IN DRAWING	20AUG2014	YR	MB

TECHNICAL DATA	3-2271144-2	4-2271144-2
RATED VOLTAGE	250V	125V
RATED IMPULSE VOLTAGE	2500V	1500V
POLLUTION DEGREE	3	3
OVERVOLTAGE CATEGORY	II	II
MATERIAL GROUP	II	II
RATED CURRENT	4A	4A
VOLUME RESISTIVITY	≤ 3mΩ	≤ 3mΩ
DEGREE OF PROTECTION	IP68	IP68
UPPER TEMPERATURE	+85 °C	+85 °C
LOWER TEMPERATURE	-40 °C	-40 °C

1 MATERIAL: ITEM NO. 1: HOUSING - BRASS, ZINC DIECASTING, NICKEL PLATED
ITEM NO. 2: CONTACT BODY - PA
ITEM NO. 3: CONTACT - CuSn (BRONZE)
CONTACT FINISH - Au (gold)

2 ALL DIMENSIONS ARE FOR NOMINAL REFERENCE ONLY UNLESS OTHERWISE STATED

3 PACKAGING: 20 PIECE IN A BAG

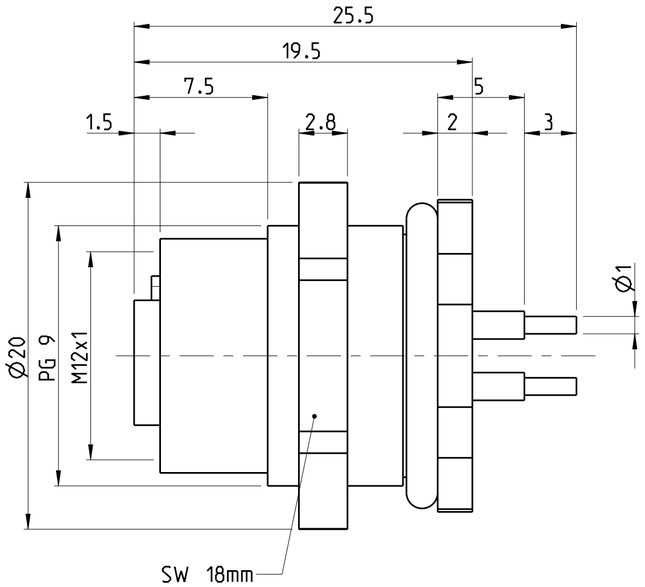

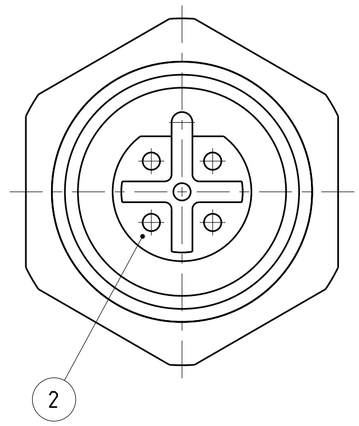

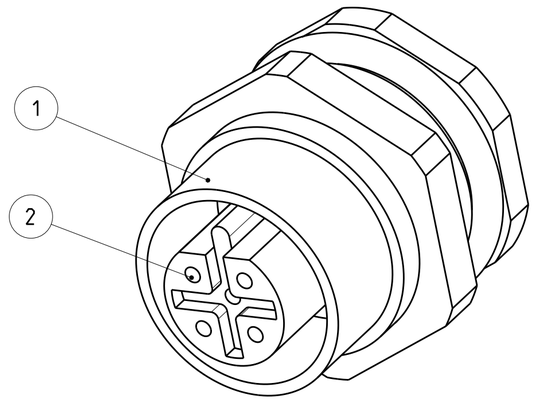

PIN ARRANGEMENT
B-CODING

3-2271144-2

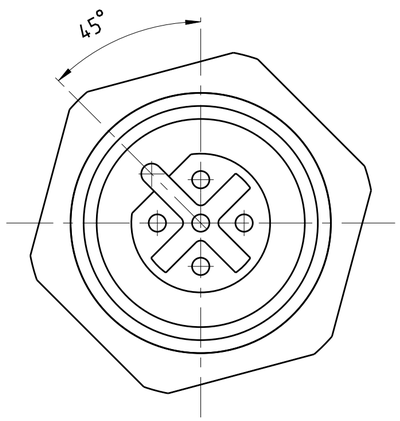

4-2271144-2

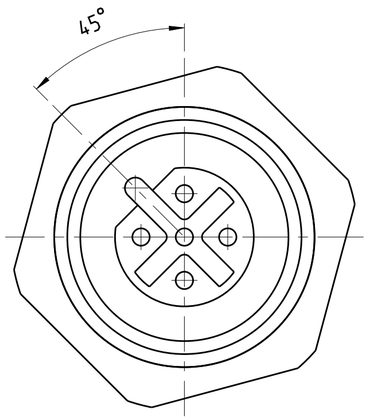

PCB LAYOUT

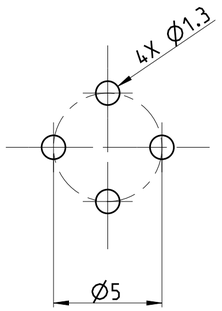

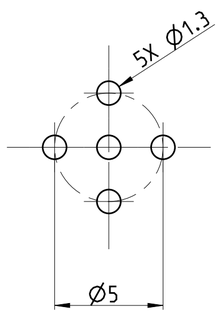

3--2 AS SHOWN
WIE GEZEICHNET

1	5	4-2271144-2
1	4	3-2271144-2
MATERIAL	NUMBER OF POLES	TE-PART-NO.

DIESE ZEICHNUNG IST EIN KONTROLLIERTES DOKUMENT.
BEMASSUNGEN UND TOLERANZEN GEMAESS GPS (ISO STANDARDS).
THIS DRAWING IS A CONTROLLED DOCUMENT.
DIMENSIONING AND TOLERANCING PER GPS (ISO STANDARDS).

DIMENSIONS: MASSEINHEITEN: mm
TOLERANCES UNLESS OTHERWISE SPECIFIED: ALLGEMEINTOLERANZEN
0 PLC ±
1 PLC ±
2 PLC ±
3 PLC ±
4 PLC ±
ANGLES/WINKEL ±
FINISH/OBERFLAECHE/FARBE SEE NOTS
MATERIAL SEE NOTES

SIZE ISO 14405 Ⓔ

DWN YASHKUMAR 15MAY2014
CHK M.STRELOW 15MAY2014
APVD C.SCHRETTLINGER 15MAY2014
PRODUCT SPEC PRODUKTSPEZ. 108-19483
APPLICATION SPEC VERARBEITUNGSSPEZ. 114-32127
WEIGHT GEWICHT -

TE Connectivity

NAME
M12 RECEPTACLE, FEMALE, PCB MOUNT, PANEL REAR, STRAIGHT, B-CODED
-

SIZE	CAGE CODE	DRAWING NO ZEICHNUNGS-NR.	RESTRICTED TO NUR FUER
A2	00779	C-2271144	-

Customer Drawing /KUNDENZEICHNUNG
SCALE MASSSTAB 4:1 SHEET BLATT 1 OF VON 1 REV A2

1471-9 (3/13)