THIS DRAWING IS UNPUBLISHED. RELEASED FOR PUBLICATION -,- .
© COPYRIGHT - BY TYCO ELECTRONICS CORPORATION. ALL RIGHTS RESERVED.

LOC	DIST
AD	47

REVISIONS

P	LTR	DESCRIPTION	DATE	DWN	APVD
	C	REVISED PER ECO-07-027626	28NOV07	DH	JE
	C1	REVISED PER ECO-10-000443	16JAN10	KK	AEG
	D	ECR-10-019054	15SEP10	DP	MQW

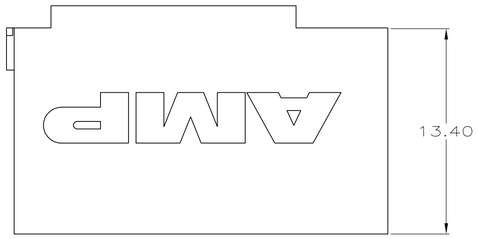

1. MATERIAL: GLASS FILLED POLYESTER.
2. PART NUMBER MARKED IN APPROXIMATE AREA SHOWN. ADDITIONAL CHARACTERS OR MARKINGS, AS WELL AS THE LOCATION OF THE MARKINGS, MAY BE ADDED FOR TRACEABILITY BASED UPON MANUFACTURERS DISCRETION.
3. TO BE MEASURED AT BASE OF SHROUD.
4. OBSOLETE PARTS: OBSOLETE CIS STREAMLINING PER D.RENAUD/D.SINISI

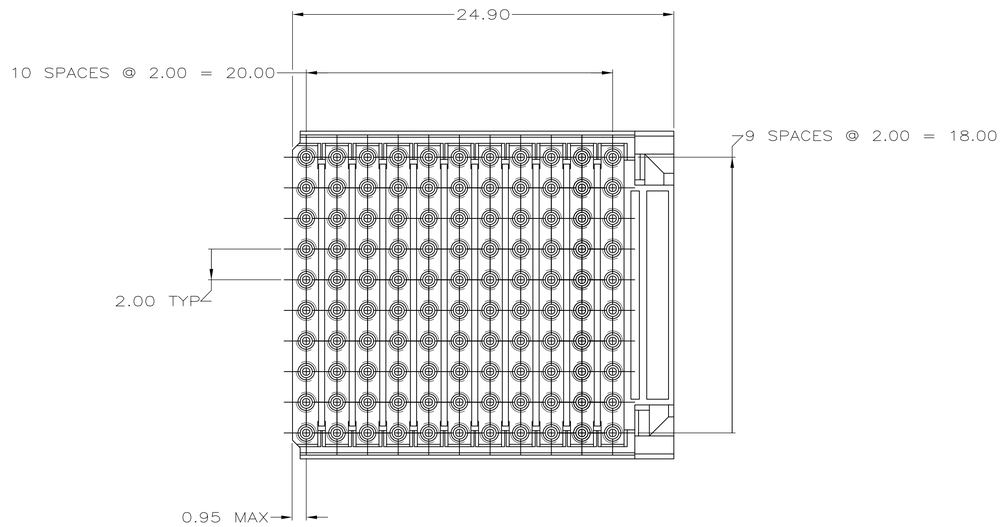

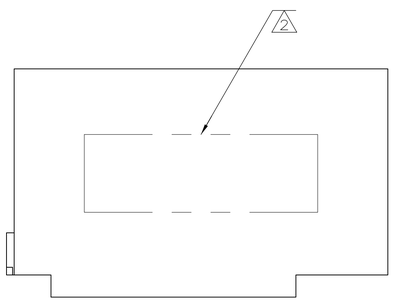

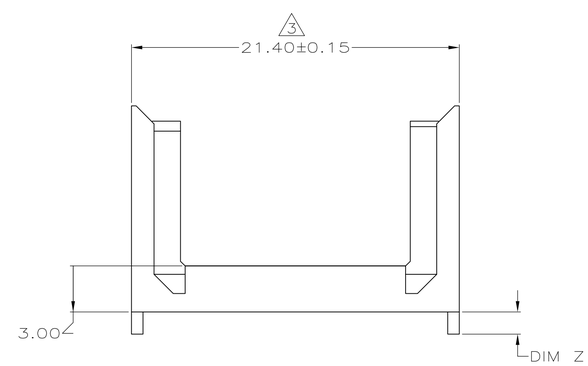

	DIM Z	PART NUMBER
	1.90	646525-7
4 OBSOLETE	1.70	~~646525-6~~
	1.50	646525-5
4 OBSOLETE	1.30	~~646525-4~~
	1.10	~~646525-3~~
	0.90	646525-2
	–	646525-1

THIS DRAWING IS A CONTROLLED DOCUMENT.

DIMENSIONS: mm

TOLERANCES UNLESS OTHERWISE SPECIFIED:
0 PLC ± –
1 PLC ± –
2 PLC ± 0.05 ±0.2
3 PLC ± –
4 PLC ± –
ANGLES ± –

MATERIAL 1

FINISH –

DWN T. SHUEY 2-9-99
CHK R. PATTERSON 2-10-99
APVD R. PATTERSON 2-10-99
PRODUCT SPEC –
APPLICATION SPEC –
WEIGHT –

Tyco Electronics
Tyco Electronics Corporation
Harrisburg, PA 17105-3608

NAME SHROUD,TYPE F,Z-PACK 2mm HM, 8 ROW,110 POSITION –

SIZE	CAGE CODE	DRAWING NO	RESTRICTED TO
A1	00779	C-646525	–

CUSTOMER DRAWING

SCALE	SHEET	REV
5:1	1 OF 1	D