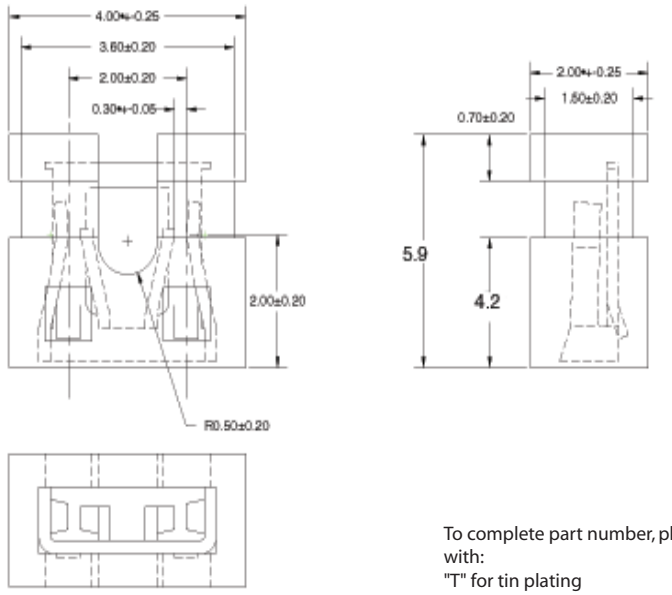

To complete part number, please replace "x" with:
"T" for tin plating
"P" for gold flash

SULLINS 691 E. MISSION RD. SAN MARCOS, CA 92069	GENERAL TOLERANCE XX +- / XXX +- X +- 0.20 / XXX +- .X +- 0.10 / X.X +- .XX +- 0.05 / XX.X +-	SCALE 15:1 UNIT MM SIZE A4	DRAWN CHECK APPROVE	DATE DATE DATE	DWG. NO. T0026 PARTS NO. SxN02SYBN	TITLE	REV. SHEET