LEADED PRODUCT NUMBER	AS AVAILABLE
54112–XXX–XX–XXXX	

RoHs COMPATIBLE PRODUCT NUMBER
54112–XXXXXXXXXLF

PLATING

1 = 0.76µm GOLD/GXT ON CONTACT AREA
2µm MIN MATTE TIN ON TAIL
OVER 1.27µm Ni MIN

4 = 2µm MIN MATTE TIN
OVER 1.27µm Ni MIN

5 = 0.25µm GOLD/GXT ON CONTACT AREA
2µm MIN MATTE TIN ON TAIL
OVER 1.27µm Ni MIN

8 = 0.38µm GOLD/GXT ON CONTACT AREA
2µm MIN MATTE TIN ON TAIL
OVER 1.27µm Ni MIN

RoHS COMPATIBLE
SEE NOTE 8

STACK HEIGHT, NOTE 6

TOTAL NB OF POSITIONS
04 TO 72

OAL	PIN STYLE
13.5	02
15.9	03
16.56	15
16.76	04
17.65	05
18.91	06
20.50	28
20.96	07
21.25	19
23.5	08
26.04	09
26.42	14
28.00	18
28.58	10
30.48	20
31.12	11
32.15	21
33.66	12
34.00	13
36.20	16
37.30	22
38.40	23
42.30	24
43.00	25
47.00	26
52.00	27

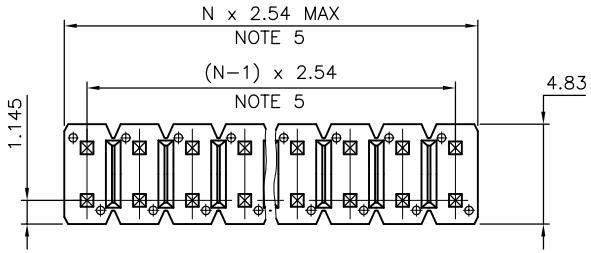

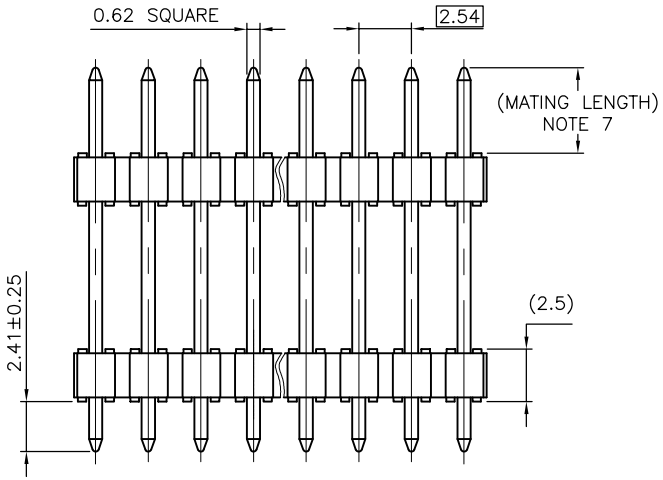

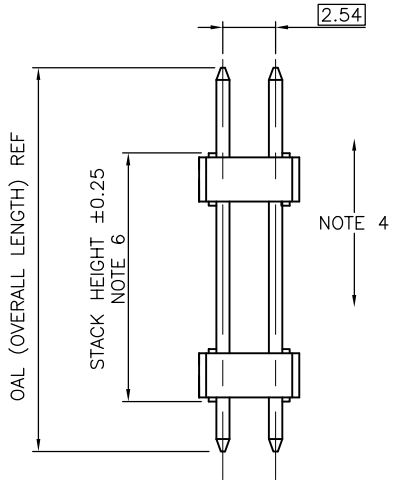

NOTES:

1. HOUSING MAT'L : HIGH TEMPERATURE THERMOPLASTIC. UL94V–0 COLOR: BLACK
2. PIN MATERIAL : PHOSPHOR BRONZE
3. STANDARD PACKAGING IN POLYBAG
4. 9N MIN RETENTION IN EITHER DIRECTION
5. TO DETERMINE DIMENSIONS :
   N = NUMBER OF POSITIONS PER ROW
   EXAMPLE : 8 POS PER ROW, N x 2.54 = 20.32mm
6. XXXX = MILLIMETERS
   SPECIFY MILLIMETERS
   5.0mm MIN TO 45.0mm MAX AVAILABLE
   IN 0.5mm INCREMENT
   EXAMPLE FOR STACK HEIGHT: 1 2 7 5 = 12.75mm
7. MATING LENGTH = (OAL)–(2.41)–(STACK HEIGHT)
8. RoHS COMPATIBLE PRODUCT SPECIFICATIONS
   a – PLATING:
   – "LF" MEANS THE PRODUCT IS LEAD–FREE, 2µm MINIMUM MATTE TIN OVER 1.27µm MINIMUM NICKEL UNDERPLATE.
   b – MANUFACTURING PROCESS COMPATIBILITY
   – THE HOUSING WILL WITHSTAND EXPOSURE TO 260°C ±5°C SOLDER BATH TEMPERATURE FOR 5 SECONDS IN A WAVE SOLDER APPLICATION WITH A 1.6mm MIN THICK CIRCUIT BOARD.
   c – LABELLING:
   – MEETS PACKAGING SPECS AS PER GS–14–920
   d – THIS PRODUCT MEETS EUROPEAN UNION DIRECTIVES AND OTHER COUNTRY REGULATIONS AS DESCRIBED IN GS–47–0004.

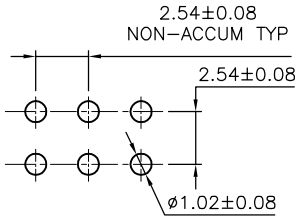

RECOMMENDED HOLE PATTERN

mat'l. code	surface	tolerance	projection	product family
SEE NOTES	ISO 1302	ISO 406 ISO 1101		BERGSTIK

ltr	ecn no	dr	date
H	B–15647	LMU	13.02.14
J	B–18962	LMU	14.09.29
K	B–19782	AMA	14.12.16
E	F06–0196	LMU	06.06.13
F	F08–0148	RTR	08.03.31
G	F09–0009	JCO	09.02.16

tolerances unless otherwise specified: angles; linear x.x ±0.3, x.xx ±0.13, x.xxx ±0.05

dr	LMU	01.01.24
engr	JCO	01.01.24
chr	JCO	01.01.24
appd	JCO	01.01.24

mm
scale 4:1

title: UNSHR.HEADER
STR DR TMT

dwg no 54112 — sheet 1 of 1 — size A3
type CUSTOMER Drawing

sheet index — revision sheet

form: A3

FCIconnect.com
Copyright FCI