THIS DRAWING IS UNPUBLISHED. RELEASED FOR PUBLICATION -,- .
© COPYRIGHT - BY TYCO ELECTRONICS CORPORATION. ALL RIGHTS RESERVED.

LOC	DIST
G	14

REVISIONS

P	LTR	DESCRIPTION	DATE	DWN	APVD
	D	REV PER ECR 07-002624 & 002751	11APR07	JR	TM

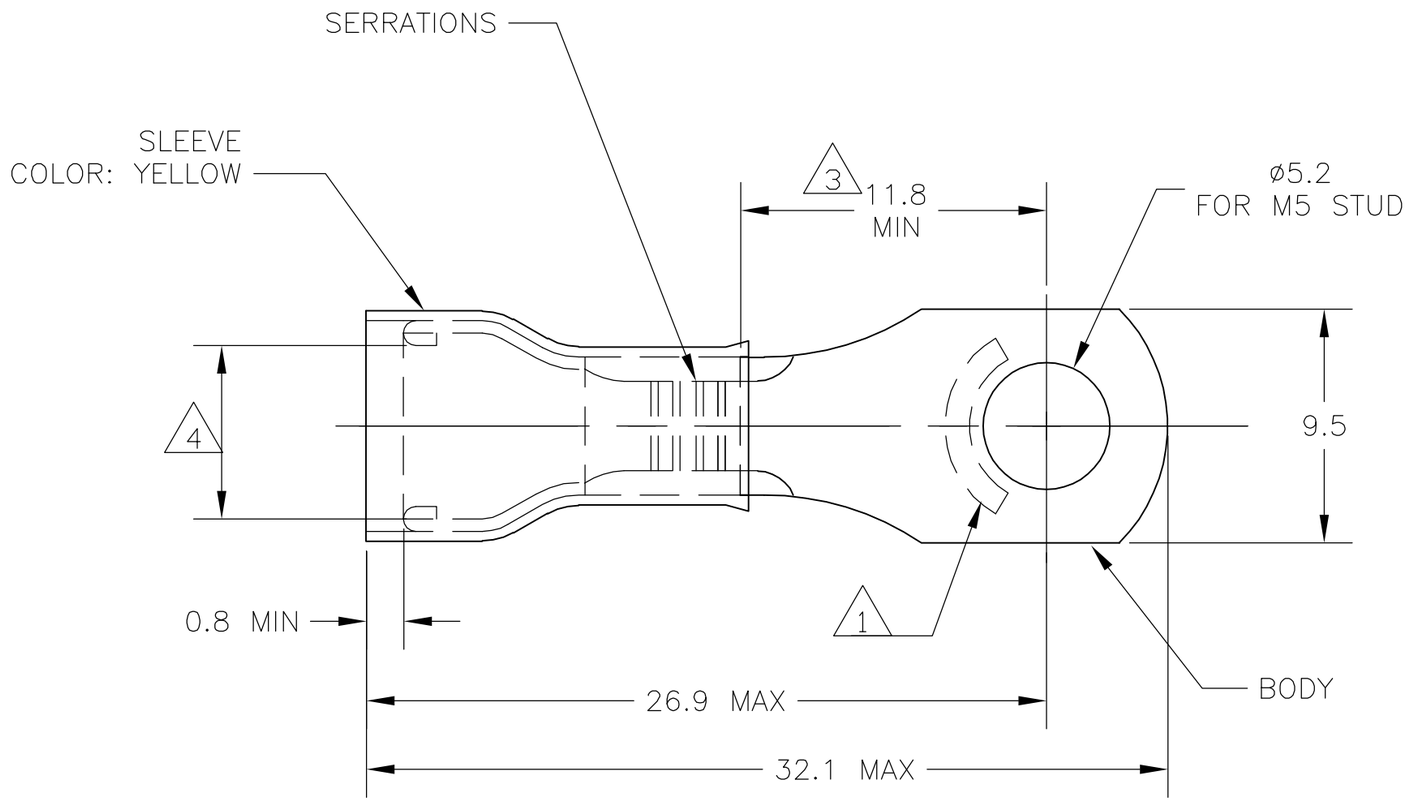

1. STAMP "AMP 12-10*", LOCATION APPROX AS SHOWN.
2. TONGUE THICKNESS IS 1.0±0.05
3. APPLIES TO EDGE OF METAL WIRE BARREL TO CENTER OF STUD HOLE.
4. WIRE INSULATION DIA RANGE 3.8-6.4
5. BODY - COPPER PER ASTM B-152
   SLEEVE - COPPER PER ASTM B-152
   INSULATION - NYLON
6. BODY - TIN PL PER ASTM B-545
   SLEEVE - TIN PL PER ASTM B-545
   INSULATION - COLOR - YELLOW
7. 105°C MAX OPERATING TEMPERATURE.
8. 300 VOLT MAX
9. 2.62-6.64mm2 [5,180 - 13,100 CMA]
   SOLID OR STRANDED

500	LOOSE PIECE	130466
QTY	PACKAGE TYPE	PART NO

THIS DRAWING IS A CONTROLLED DOCUMENT.

DIMENSIONS: mm ~~INCHES~~

TOLERANCES UNLESS OTHERWISE SPECIFIED:

0 PLC	± -
1 PLC	± 0.1
2 PLC	± -
3 PLC	± -
4 PLC	± -
ANGLES	± 5°

MATERIAL - 5

FINISH - 6

DWN jr ruth 11APR07
CHK T MICHIELUTTI 11APR07
APVD T MICHIELUTTI 11APR07
PRODUCT SPEC —
APPLICATION SPEC —
WEIGHT —

Tyco Electronics
Tyco Electronics Corporation
Harrisburg, PA 17105-3608

NAME
TERMINAL RING TONGUE,
PIDG, WIRE SIZE 12-10
—

SIZE	CAGE CODE	DRAWING NO	RESTRICTED TO
A3	00779	C-130466	—

CUSTOMER DRAWING

SCALE	SHEET	REV
4:1	1 OF 1	D

AMP 1470-19 REV 31MAR2000