REV.	DESCRIPTION	DATE	DESIGNED
1			

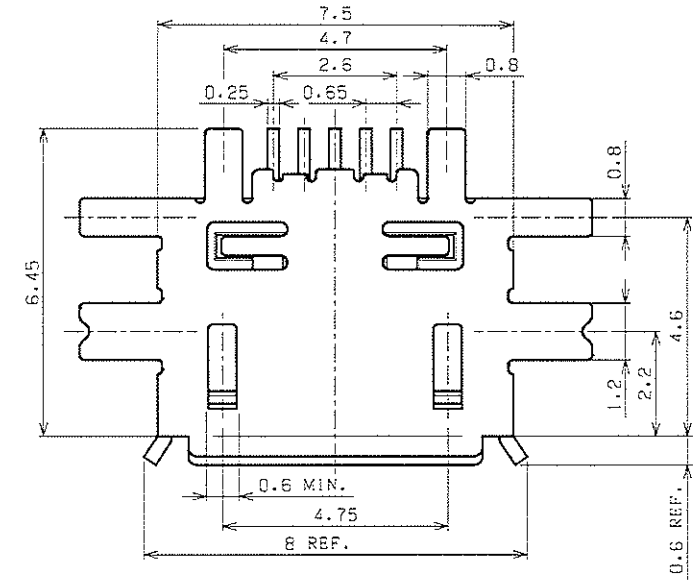

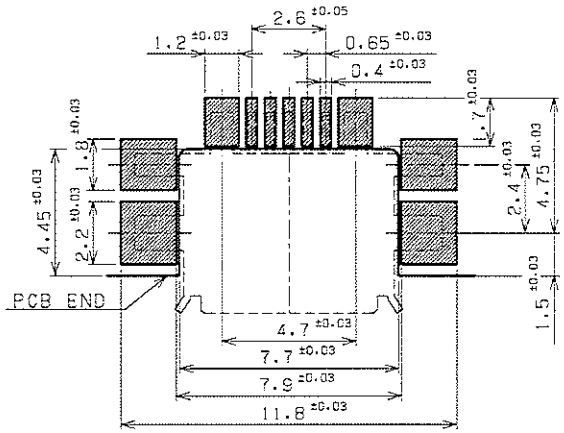

PCB LAYOUT(REFERENCE)

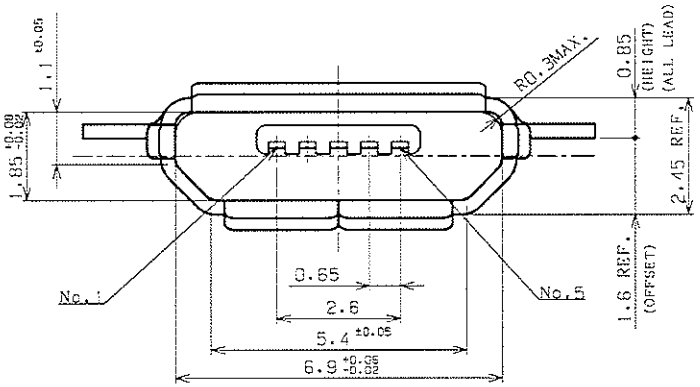

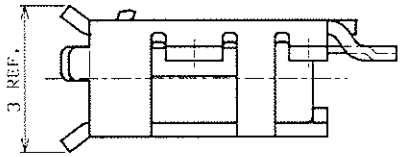

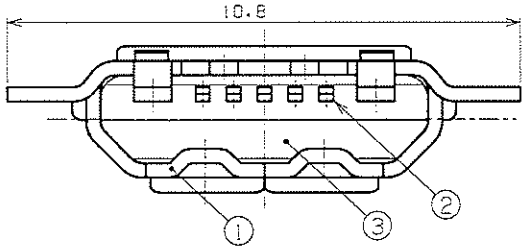

NOTS 1:UNLESS OTHERWISE SPECIFIED TOLERANCE: ±0.3
2:SURFACE FINISH OF CONTACT :
OVER ALL :NICKEL UNDER PLATED
CONTACT POINTS:GOLD PLATED
SOLDER TAILS :GOLD PLATED
3:SURFACE FINISH OF SHELL
OVER ALL :NICKEL UNDER PLATED
TIN PLATED

No.	PART NAME	MATERIAL	SURFACE FINISH	REMARKS
3	SHELL	STAINLESS STEEL	NOTE 3	t=0.3
2	CONTACT	COPPER ALLOY	NOTE 2	
1	HOUSING	HEAT RESISTING RESIN	BLACK	UL94V-0

SIZE	UNIT	SCALE	PROJECTION	DATE
A3	METRIC	10:1		16.JUN.2009

APPROVED	CHECKED	DESIGNED	DRAWN
S.U		Y.N	Y.N

JST J.S.T.MFG.CO, .LTD

CUSTOMER

SERIES NAME: Micro USB Rec. Mid mount Btype 0.85mm height (1.6mm offset)

PART No.: UB-MC5BR3-M04-4S NMP

DRAWING No.: CT7-00350-220-4 R0

THIS DRAWING CONTAINS INFORMATION THAT IS PROPRIETARY TO J.S.T.
AND SHOULD NOT BE USED WITHOUT WRITTEN PERMISSION.

EC4109-2

REV.	DESCRIPTION	DATE	DESIGNED
⚠			

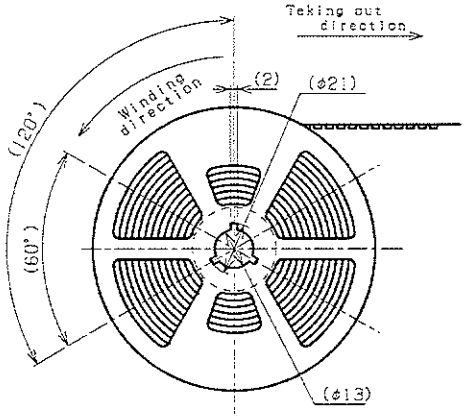

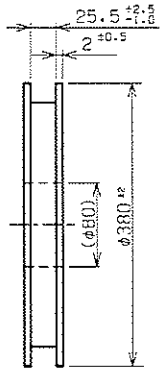

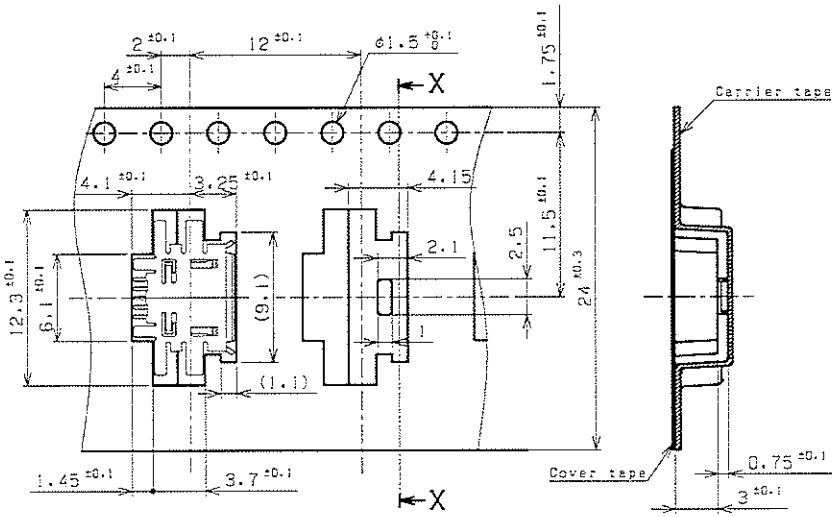

X-Xsec.

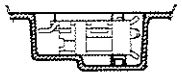

NOTE

1) Connector part:See the DWG.

2) Quantity to be packaged:2000pcs/reel.

3) Leading tape length.

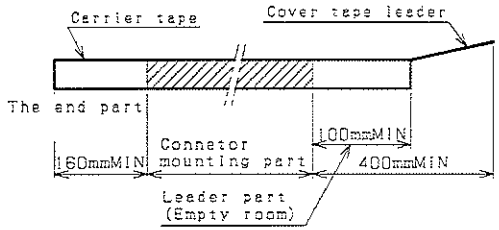

4) Cover tape peel strength:0.1~1N
Peeling speed:300mm/min.

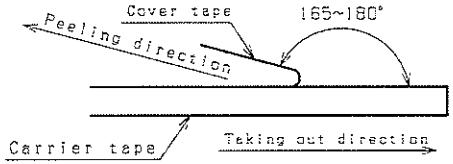

5) Materiel

:Carrier tape:Polyster(PET)

:Cover tape :Polester(PET)

:Reel :Flange. Polystyrene(PS)

:Core. Polypropylene(PP)

:Core. Polystyrene(PS)

6) Unless otherwise spscified tolerance are ±0.3.

SIZE	UNIT	SCALE	PROJECTION	DATE	CUSTOMER	
A3	METRIC	FREE		5.FEB.2010		
APPROVED	CHECKED		DESIGNED	DRAWN	SERIES NAME	MicroUSB Receptacle Mid mount Btype
S.U			Y.N	Y.N	PART No.	UB-MC5BR3-M04-4S-TB NMP
JST J.S.T.MFG.CO, .LTD					DRAWING No.	CT7-00350-G20-1 RO

THIS DRAWING CONTAINS INFORMATION THAT IS PROPRIETARY TO J.S.T.
AND SHOULD NOT BE USED WITHOUT WRITTEN PERMISSION.

EC4109-2