DRAWING MADE IN AMERICAN PROJECTION

LOC 3 | PRINT DIST 14

© 1955 BY AMP INCORPORATED. ALL RIGHTS RESERVED. AMP PRODUCTS COVERED BY PATENTS AND/OR PATENTS PENDING.

REVISIONS

LTR	DESCRIPTION	DATE	APPROVED
C	RELURAWN & REV. RC-5561 WM	11-19-70	
D	ADD -1 87-3069-041 PMF	7/14/87	

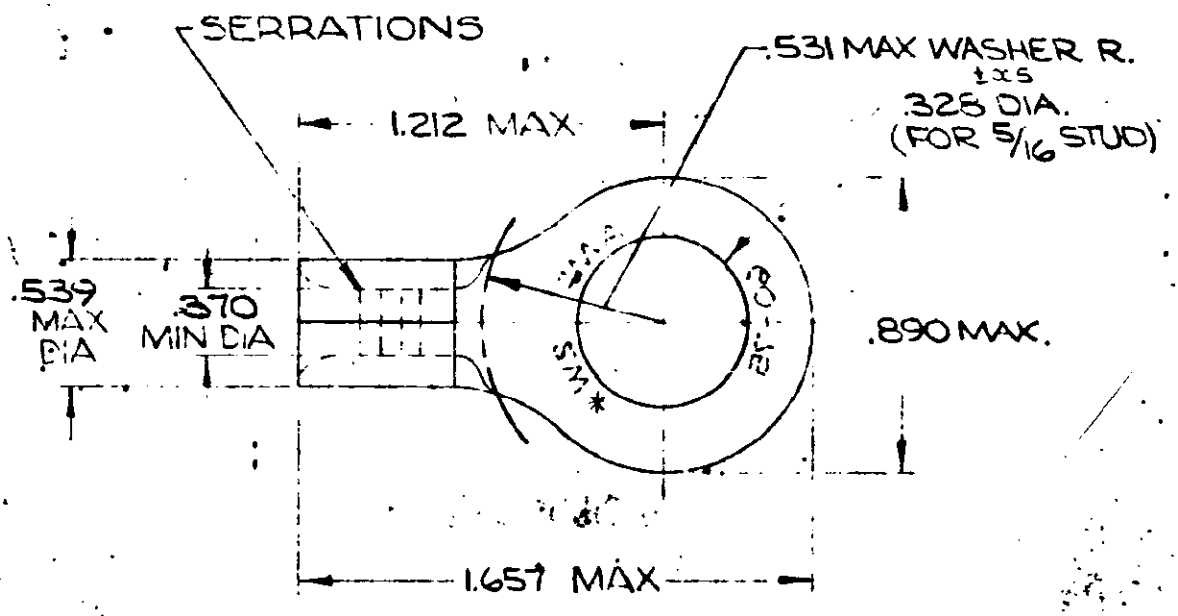

⚠1 SEE RESTRICTED CUSTOMER DRAWING 35183-1

⚠1	35183-1
	35183
	PART NO

UNLESS OTHERWISE SPECIFIED DIMENSIONS ARE IN INCHES
TOLERANCES ON:
DECIMALS ±.008
ANGLES ±5°

MATERIAL ±.003
COPPER .070 THK
(QQ-C-576)
TIN PLATE
(MIL-T-10727)
ANNEALED

CONTRACT NO.
DR. Wayne Millinay 11-4-70
CHK. M. Ensminger 11-19-70
APPD. L. Wabel 11-19-70
REL. L. Kyang 11-23-70
DSGN APPD
OTHER APPD

AMP INCORPORATED
HARRISBURG, PENNSYLVANIA

NAME WIRE TERMINAL
SOLISTRAND - RING TONGUE
WIRE SIZE: #2

SIZE	CODE IDENT NO.	NUMBER
A	00779	35183

CALL NO.

CUSTOMER DRAWING!

AMP 66-1 REV'S 69