THIS DRAWING IS UNPUBLISHED. RELEASED FOR PUBLICATION -.- .
© COPYRIGHT – BY TYCO ELECTRONICS CORPORATION. ALL RIGHTS RESERVED.

LOC	DIST
AA	00

REVISIONS

P	LTR	DESCRIPTION	DATE	DWN	APVD
	G	ECO-07-022131	05NOV07	LAM	JW
	G1	REVISED PER ECO-09-021826	12SEP09	KK	AEG

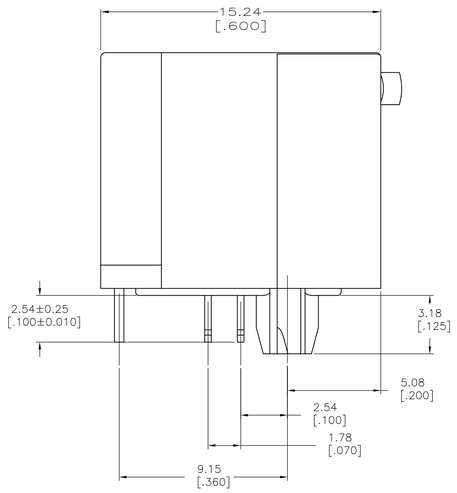

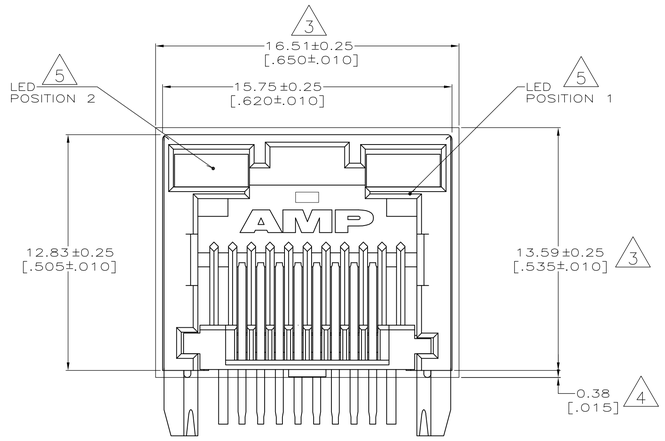

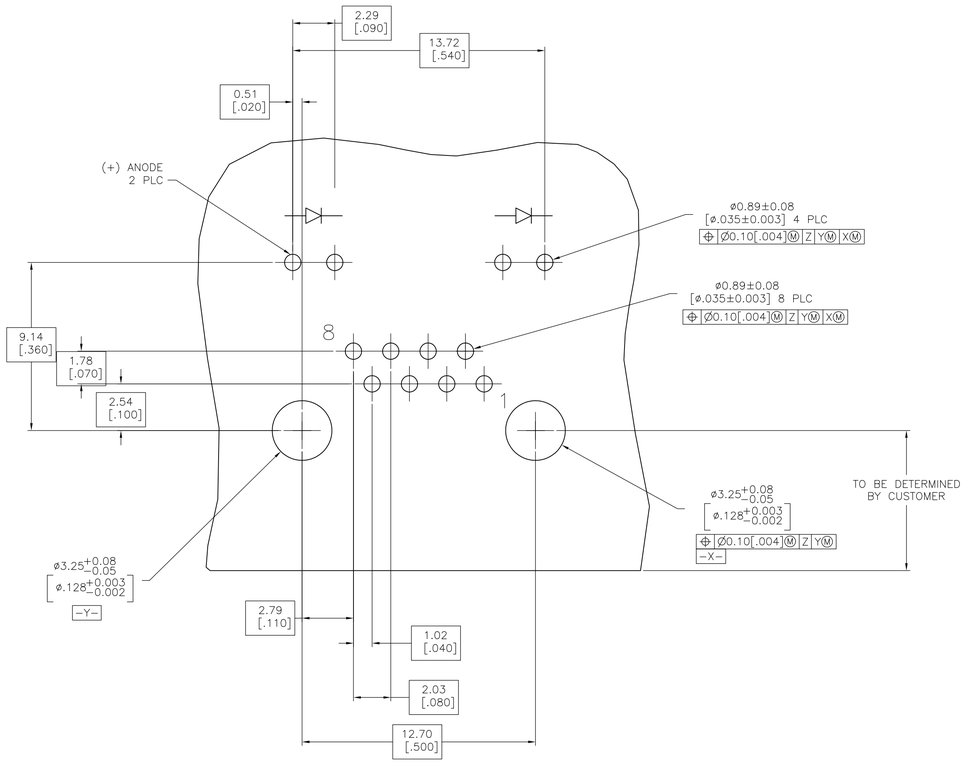

RECOMMENDED PRINTED CIRCUIT BOARD LAYOUT
(COMPONENET SIDE)

1. MATERIAL:
   HOUSING – HIGH TEMPERATURE THERMOPLASTIC, COLOR: BLACK, UL94V-0.
   TERMINALS – 0.36[.014] THICK PHOS BRONZE PLATED WITH 3.81µm[.000150] MINIMUM THICK BRIGHT TIN LEAD IN SOLDER AREA. 1.27µm [.000050] MINIMUM GOLD IN LOCALIZED PLATE AREA. ENTIRE TERMINAL PLATED WITH 1.27µm [.000050] MINIMUM THICK NICKEL.
   LIGHT EMITTING DIODE (LED) – DIFFUSED EPOXY LENS, .51 x .51[.020 x .020] CARBON STEEL WIREFRAME LEADS PLATED WITH 8.89µm[.000350] TIN/COPPER OVER 2.03µm[.000080] SILVER OVER 1.02µm[.000040] NICKEL UNDERPLATE OVER 2.03µm[.000080] COPPER UNDERPLATE.
2. JACK CAVITY CONFORMS TO FCC RULES AND REGULATIIONS PART 68, SUBPART F.

3 SUGGESTED PANEL OPENING DIMENSIONS.

4 SUGGESTED CLEARANCE BETWEEN BOTTOM OF CONNECTOR AND BOTTOM PANEL OPENING.

5 SEE TABLE FOR COLOR OF LEDS AND NUMBER REQUIRED.

6. THIS MODULAR JACK WITH INTEGRATED LED IS NOT IR REFLOW SOLDERING PROCESS COMPATIBLE.

7 OBSOLETE PARTS: OBSOLETE CIS STREAMLINING PER D.RENAUD/D.SINISI

	INDICATOR COLOR		PART NUMBER
7 OBSOLETE	GREEN	–	~~1-406533-7~~
	GREEN	RED/GREEN	~~1-406533-0~~
	YELLOW	YELLOW	~~406533-6~~
	YELLOW	–	~~406533-3~~
	–	GREEN	~~406533-2~~
	YELLOW	GREEN	406533-1
	POSITION 2	POSITION 1	

THIS DRAWING IS A CONTROLLED DOCUMENT.

DIMENSIONS: mm

TOLERANCES UNLESS OTHERWISE SPECIFIED:
0 PLC ± –
1 PLC ± –
2 PLC ± 0.25[.010]
3 PLC ± 0.13[.005]
4 PLC ± –
ANGLES ± –

MATERIAL: SEE NOTE 1
FINISH: SEE NOTE 1

DWN T. SPRINKLE 17SEP97
CHK T. SPRINKLE 17SEP97
APVD M. DERSTINE 17SEP97
PRODUCT SPEC 108-1163-4
APPLICATION SPEC 114-2154
WEIGHT –

Tyco Electronics
Tyco Electronics Corporation
Harrisburg, Pa 17105-3608

NAME: INVERTED MODULAR JACK ASSEMBLY, 1X1, LED
–

SIZE	CAGE CODE	DRAWING NO	RESTRICTED TO
A1	00779	C-406533	–

CUSTOMER DRAWING | SCALE 8:1 | SHEET 1 OF 1 | REV G1