Surface Mount

Frequency Mixer

HJK-20VH+
HJK-20VH

Level 20 (LO Power +20 dBm) 1090 to 1950 MHz

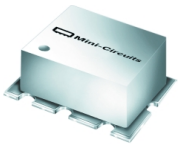

CASE STYLE: TTT167
PRICE: $24.95 ea. QTY (1-9)

+ RoHS compliant in accordance with EU Directive (2002/95/EC)

The +Suffix identifies RoHS Compliance. See our web site for RoHS Compliance methodologies and qualifications.

Maximum Ratings

Operating Temperature	-20°C to 85°C
Storage Temperature	-55°C to 100°C
LO Power	22 dBm

Pin Connections

LO	2
RF	1
IF	3
GROUND	4,5,6

Features

- high IP3, up to 30 dBm typ.
- low spurious
- 2RF-LO, -73 dBc typ.
- 2LO-2RF, -73 dBc typ.

Applications

- for cable tv up converter (second mixer)
- communication systems

Outline Drawing

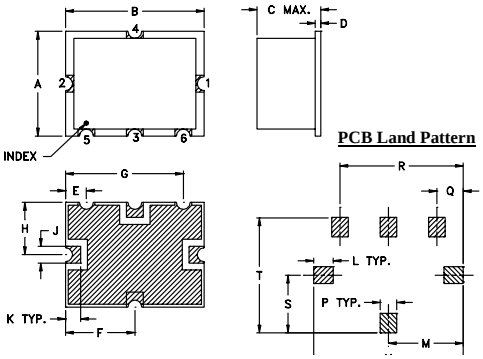

Suggested Layout,
Tolerance to be within ±.002

Outline Dimensions (inch / mm)

A	B	C	D	E	F	G	H	J
.375	.500	.23	.020	.075	.250	.425	.187	.050
9.53	12.70	5.84	0.51	1.91	6.35	10.80	4.75	1.27

K	L	M	N	P	Q	R	S	T	wt.
.050	.070	.270	.540	.060	.095	.445	.208	.415	grams
1.27	1.78	6.86	13.72	1.52	2.41	11.30	5.28	10.54	0.8

Electrical Specifications (T_{AMB}=25°C)

FREQUENCY (MHz)			CONVERSION LOSS (dB)			SECOND ORDER I.M. (Note 1) (dBc) Max.		RF in at 1dB Compr (dBm)	IP3 (dBm)	LO-RF ISOLATION (dB)		LO-IF ISOLATION (dB)	
RF	LO	IF	$\bar{X}$	σ	Max.	2RF-LO	2LO-2RF	Typ.	Typ.	Typ.	Min.	Typ.	MIn
1090	1167-1950	77-870	7.2	0.2	8.5	-65	-63	15	30	32	26	34	26
1090	1183-1590	93-500	7.16	0.18	8.2	-73	-73	15	29	34	26	35	28
1090	1590-1800	500-710	7.24	0.10	8.5	-73	-70	15	27	34	26	38	26
1090	1800-1900	710-810	7.37	0.11	8.5	-68	-65	15	27	35	28	38	28
1090	1900-1950	810-860	7.37	0.13	8.5	-65	-63	15	27	37	28	35	28

Note 1. Measured at -14 dBm RF. High order spurious 3RF-2LO, 4RF-2LO, 4RF-3LO, 3RF-2LO, 3RF-2LO (dBc) typ.<-80 dBc

Typical Performance Data

Frequency (MHz)		Conversion Loss (dB)	Isolation L-R (dB)	Isolation L-I (dB)	VSWR RF Port (:1)	VSWR LO Port (:1)	2RF-LO (dBc)	2RF-2RF (dBc)	IP3 (dBm)
RF	LO	LO +20dBm	LO +20dBm	LO+20dBm	LO+20dBm	LO+20dBm	LO+20dBm	LO+20dBm	LO+20dBm
1090	1167	7.2	38	32	2.0	9.5	-77	-79	32
1090	1183	7.2	39	33	2.0	6.4	-79	-81	34
1090	1590	7.6	32	42	1.8	2.8	-79	-79	29
1090	1800	7.5	32	39	1.9	3.9	-83	-78	28
1090	1900	7.5	33	33	1.8	4.6	-79	-74	28
1090	1950	7.4	34	32	1.8	3.8	-71	-68	27

Demo Board MCL P/N: TB-12
Suggested PCB Layout (PL-079)

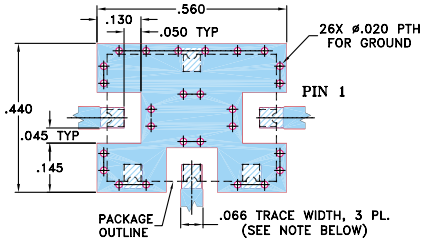

NOTE: 1. TRACE WIDTH IS SHOWN FOR ROGERS RO4350B WITH DIELECTRIC THICKNESS .030" ± .002"; COPPER: 1/2 OZ. EACH SIDE. FOR OTHER MATERIALS TRACE WIDTH MAY NEED TO BE MODIFIED.
2. GROUND PAD SHALL BE FREE OF SOLDER MASK IF REQUIRED FOR SOLDERING.
3. BOTTOM SIDE OF THE PCB IS CONTINUOUS GROUND PLANE.

DENOTES PCB COPPER LAYOUT WITH SMOBC (SOLDER MASK OVER BARE COPPER), SEE NOTE 2.

DENOTES COPPER LAND PATTERN FREE OF SOLDER MASK

Electrical Schematic

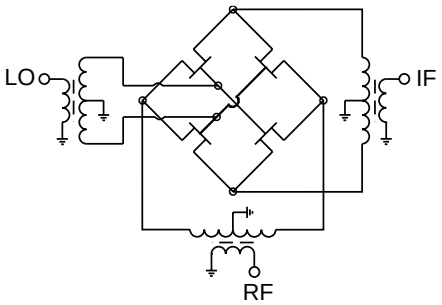
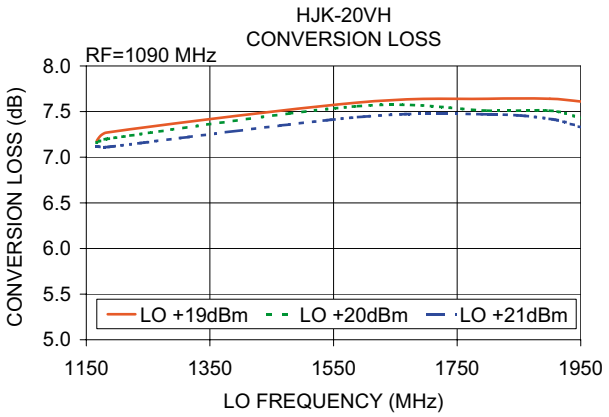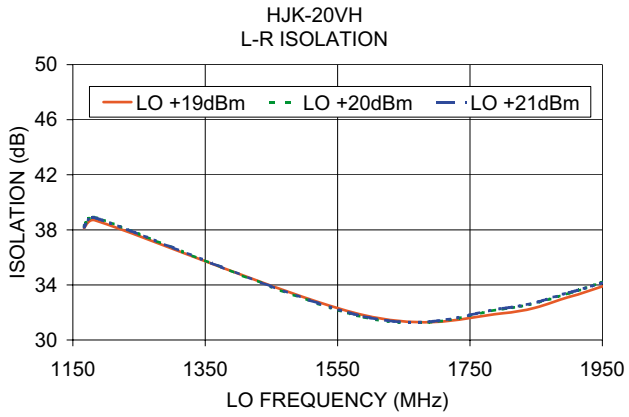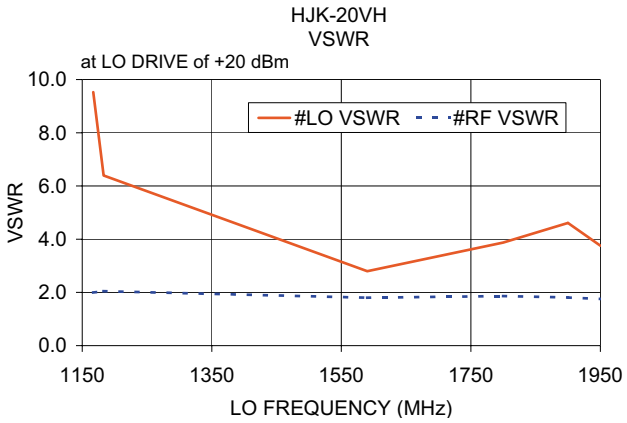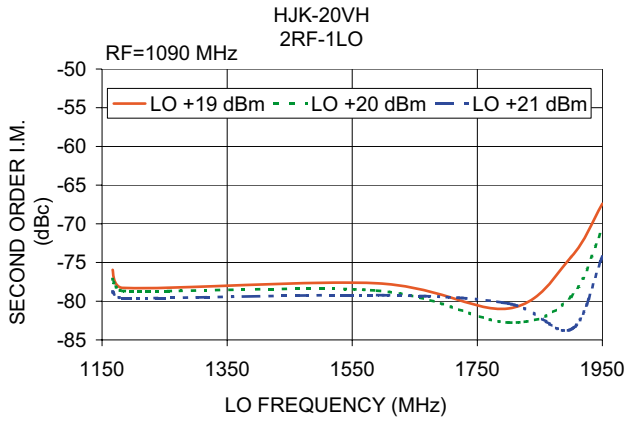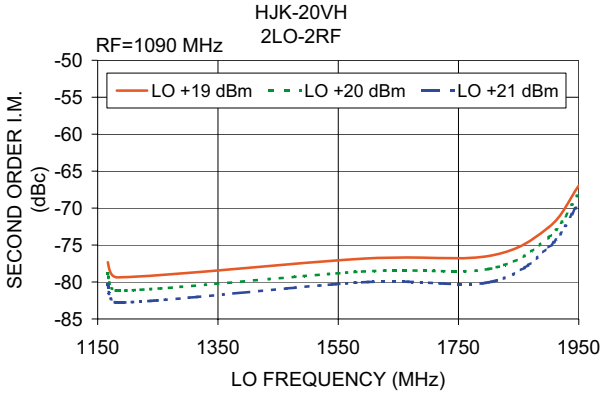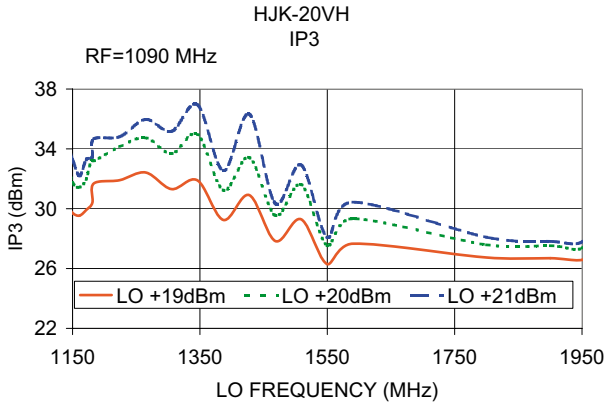
Performance Charts