DWG. NO. SD-53324-003

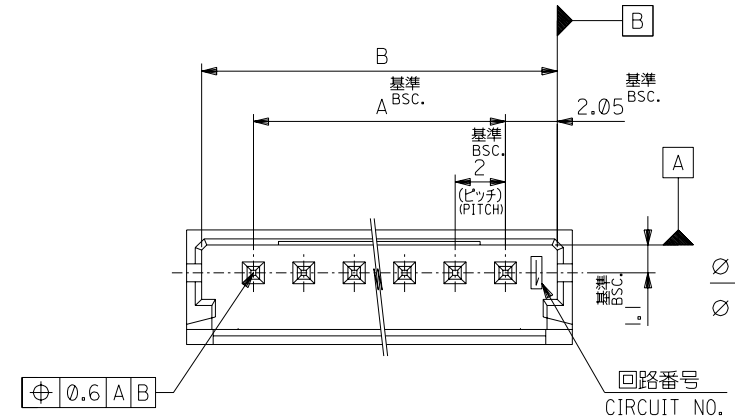


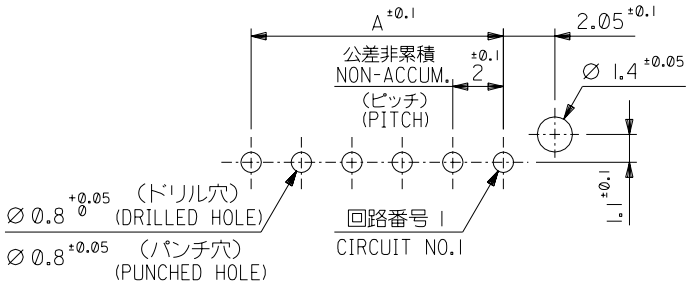


基板取付穴推奨寸法（t＝1．6）

RECOMMENDED P.C. BOARD HOLE DIM.（t＝1．6）

## 注 記 NOTES

1. 嵌合相手：51090-**00, 52484-**1*
   MATES WITH
2. 材質
   MATERIAL
   ウエハー：ガラス入り　66ナイロン
   UL94V-0　色：表参照
   WAFER : GLASS FILLE 66 NYLON
   UL94V-0, COLOR : SEE CHART
   ピン　：黄銅、スズメッキ
   PIN : BRASS, PRE-TINNED

3. キンクは全ピンに交互に付加。2極はキンク無し。
   SET KINK ALTERNATELY TO ALL CIRCUITS.
   CIRCUIT 2 HAS NO KINK.

4. 製品番号
   MATERIAL NO.
   53324-**6*
   極数CIRCUIT SIZE　色COLOR

| | |
|---|---|
| ナチュラル（白） NATURAL(WHITE) | 0 |
| 赤 RED | 2 |
| 黄 YELLOW | 3 |
| 青 BLUE | 4 |

無　鉛
LEAD FREE

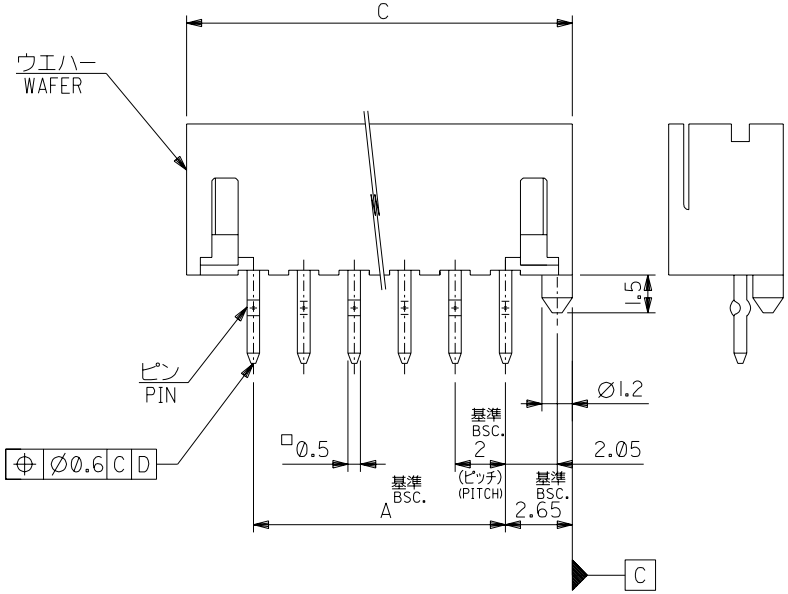


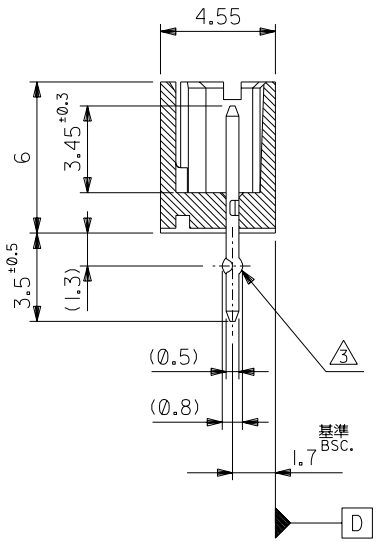


| 極数 CKT. | C | B | A | 4. MATERIAL NO. | MODEL NO. |
|---|---|---|---|---|---|
| 15 | 33.3 | 32.1 | 28 | 53324-156* | 53324-**6* |
| 14 | 31.3 | 30.1 | 26 | -146* | |
| 13 | 29.3 | 28.1 | 24 | -136* | |
| 12 | 27.3 | 26.1 | 22 | -126* | |
| 11 | 25.3 | 24.1 | 20 | -116* | |
| 10 | 23.3 | 22.1 | 18 | -106* | |
| 9 | 21.3 | 20.1 | 16 | -096* | |
| 8 | 19.3 | 18.1 | 14 | -086* | |
| 7 | 17.3 | 16.1 | 12 | -076* | |
| 6 | 15.3 | 14.1 | 10 | -066* | |
| 5 | 13.3 | 12.1 | 8 | -056* | |
| 4 | 11.3 | 10.1 | 6 | -046* | |
| 3 | 9.3 | 8.1 | 4 | -036* | |
| 2 | 7.3 | 6.1 | 2 | 53324-026* | |

DO NOT SCALE DRAWING

| | | | | | |
|---|---|---|---|---|---|
| EC NO. DRWN: CH'K: APPR: | EC NO. DRWN: CH'K: APPR: | EC NO. DRWN: CH'K: APPR: | EC NO. DRWN: CH'K: APPR: | RELEASED ECNNO.J2003-2361 '03/03/13 DRWN: A.IDA '03/03/13 CH'K: J.MIYAZAWA '03/03/13 APPR: YO.ITO '03/03/13 | DESCRIPTION |
| | | | | 0 | REV |

MATERIAL 材料: 注記参照 SEE NOTES

FINISH 仕上げ: —#—

WIRE RANGE 適用電線範囲: —#—

INS. RANGE 被覆外径: —#—

GENERAL TOLERANCES: (UNLESS SPECIFIED) 一般公差

| | | |
|---|---|---|
| 10 UNDER 未満 | | ±0.2 |
| 10 OVER 以上 | 30 UNDER 未満 | ±0.25 |
| 30 OVER 以上 | | ±0.3 |
| ANGLE 角度 | | ±3° |

SCALE 5-1

DESIGN UNITS ☒mm ☐INCH

THIRD ANGLE PROJECTION

DIMENSIONS: ☐ mm/INCH ☐ INCH/mm ☒ mm ONLY

SHT | REV

REVISE ON CAD ONLY

DRAWN BY & DATE: A. Ida '03/03/13

CHECKED BY & DATE: J. Miyazawa '03/03/13

APPROVED BY & DATE: Y. Ito '03/03/13

TITLE: 2.0 WIRE TO BOARD CONN. WAFER ASS'Y (ST.)

molex MOLEX INCORPORATED

CAD FILENAME: SD-53324-003.S01

MATERIAL NO.: SEE CHART

DRAWING NO.: SD-53324-003

SHEET NO.: 1 OF 1

THIS DRAWING CONTAINS INFORMATION THAT IS PROPRIETARY TO MOLEX INCORPORATED AND SHOULD NOT BE USED WITHOUT WRITTEN PERMISSION.

SIZE B

EN-02J(097) MXJ-54