DRAWING MADE IN THIRD ANGLE PROJECTION
THIS DRAWING IS UNPUBLISHED. RELEASED FOR PUBLICATION ,19 .
© COPYRIGHT 19 BY AMP INCORPORATED. ALL INTERNATIONAL RIGHTS RESERVED.

LOC	DIST
DF	F0

REVISIONS

P	F	ZONE	LTR	DESCRIPTION	DATE	APPD
			O	REL PER NPR 93-0238 TA	8-31-93	DG
			A	REV PER 0600-3448-95 TA	1-17-96	DG
			B	REV PER 0600-4895-95 CT	1-96	DG
			C	ADD -11 PER 0600-5026-95 CT	2-96	DG

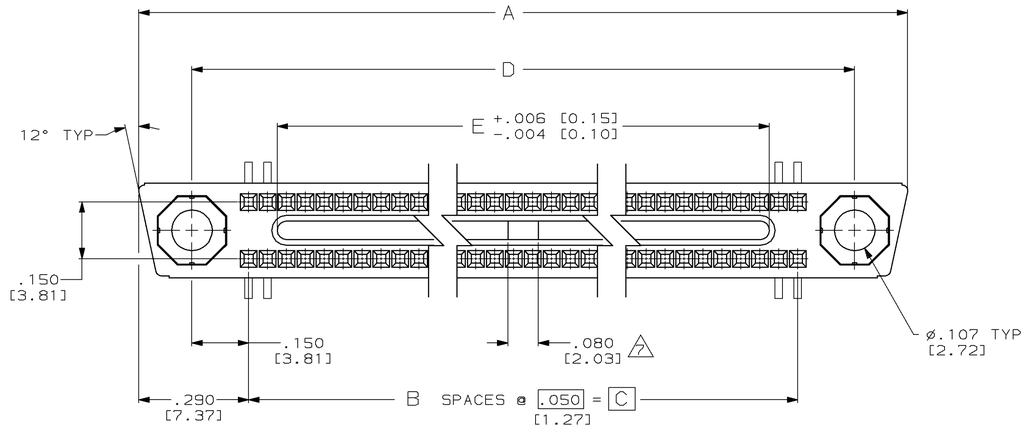

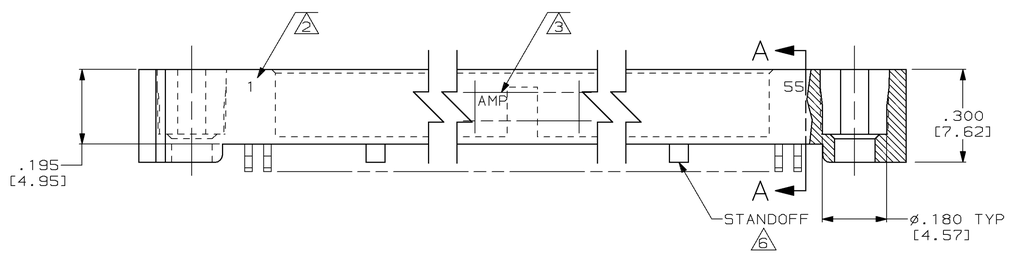

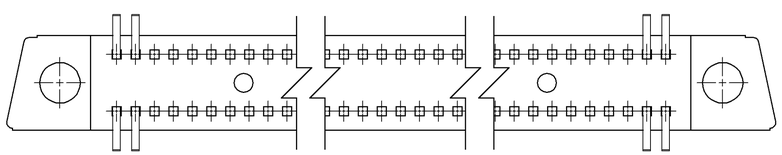

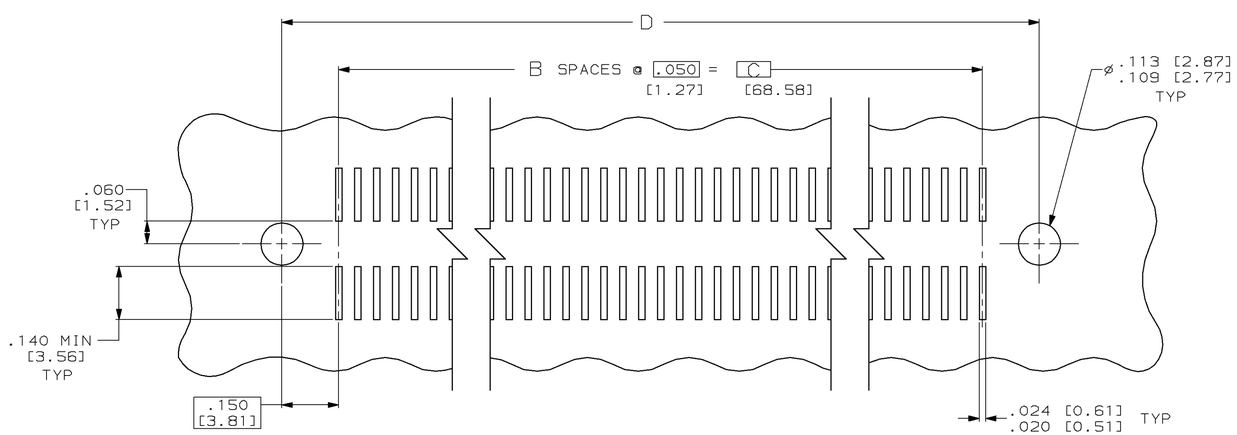

RECOMMENDED P.C. BOARD LAYOUT

1. MEETS ALL APPLICABLE REQUIREMENTS OF MIL-C-55302.

2. NUMBERS INDICATING END POSITIONS MARKED THIS SIDE ONLY.

3. AMP, PART NO. AND DATE CODE, MARKED, IN THIS APPROXIMATE AREA.

4. HOUSING MAT'L: LIQUID CRYSTAL POLYMER,COLOR: GRAY

5. EPOXY IS ADDED TO BOTTOM OF HOUSING FOR INCREASED CONTACT RETENTION.

6. 70 THRU 100 POSN CONNECTORS HAVE ONE STANDOFF, 110 POSN AND LARGER SIZES HAVE TWO STANDOFFS.

7. FEATURE NOT PRESENT ON 20 THRU 50 POSITION.

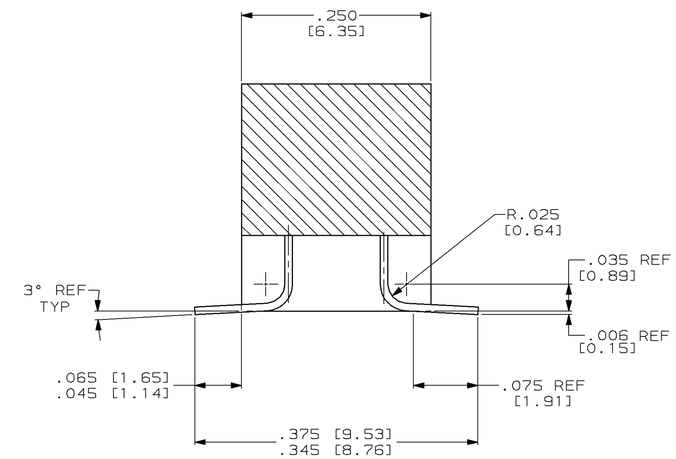

SECTION A–A
SCALE 10:1

	1 - 64	3.000 [76.20]	3.450 [87.63]	3.150 [80.01]	63	3.740 [95.00]	128	1-449599-1
NOT RELEASED	1 - 55	2.550 [64.77]	3.000 [76.20]	2.700 [68.58]	54	3.290 [83.57]	110	1-449599-0
NOT RELEASED	1 - 50	2.300 [58.42]	2.750 [69.85]	2.450 [62.23]	49	3.040 [77.22]	100	449599-9
NOT RELEASED	1 - 45	2.050 [52.07]	2.500 [63.50]	2.200 [55.88]	44	2.790 [70.87]	90	449599-8
NOT RELEASED	1 - 40	1.800 [45.72]	2.250 [57.15]	1.950 [49.53]	39	2.540 [64.52]	80	449599-7
-	1 - 35	1.550 [39.37]	2.000 [50.80]	1.700 [43.18]	34	2.290 [58.17]	70	449599-6
NOT RELEASED	1 - 30	1.300 [33.02]	1.750 [44.45]	1.450 [36.83]	29	2.040 [51.82]	60	449599-5
NOT RELEASED	1 - 25	1.050 [26.67]	1.500 [38.10]	1.200 [30.48]	24	1.790 [45.47]	50	449599-4
NOT RELEASED	1 - 20	.800 [20.32]	1.250 [31.75]	.950 [24.13]	19	1.540 [39.12]	40	449599-3
-	1 - 15	.550 [13.97]	1.000 [25.40]	.700 [17.78]	14	1.290 [32.77]	30	449599-2
NOT RELEASED	1 - 10	.300 [7.62]	.750 [19.05]	.450 [11.43]	9	1.040 [26.42]	20	449599-1
REMARKS	CAVITY ID	E	D	C	B	A	POSN	PART NUMBER

DO NOT SCALE PRINT.
UNLESS SPECIFIED
DIMENSIONS IN INCHES [mm]
TOLERANCES ON :
2 PLC DEC ± -
3 PLC DEC ± .005 [0.13]
ANGLES ± 0°30'

MATERIAL
HOUSING

FINISH
.000050 GOLD
IN CONTACT AREA
TIN-LEAD ON TAILS

DR 7-15-93 T. ALEXANDER
CHK 8-31-93 D. GUTTER
APPD 8-31-93 D. GUTTER
APPD 8-31-93 T. ALEXANDER
PRODUCT SPEC -
APPLICATION SPEC -
WEIGHT -

AMP Incorporated
Harrisburg, PA 17105-3608

NAME
RECEPTACLE ASSEMBLY
MINI-BOX, SURFACE MOUNT

SIZE D | CAGE CODE 00779 | DRAWING NO C-449599
SCALE 5:1 | SHEET 1 OF 1

THIS DRAWING IS A CONTROLLED DOCUMENT FOR AMP INCORPORATED. IT IS SUBJECT TO CHANGE AND THE CONTROLLING ENGINEERING ORGANIZATION SHOULD BE CONTACTED FOR THE LATEST REVISION.

CUSTOMER DRAWING