THIS COPY IS PROVIDED ON A RESTRICTED BASIS AND IS NOT TO BE USED IN ANY WAY DETRIMENTAL TO THE INTERESTS OF PANDUIT CORP.

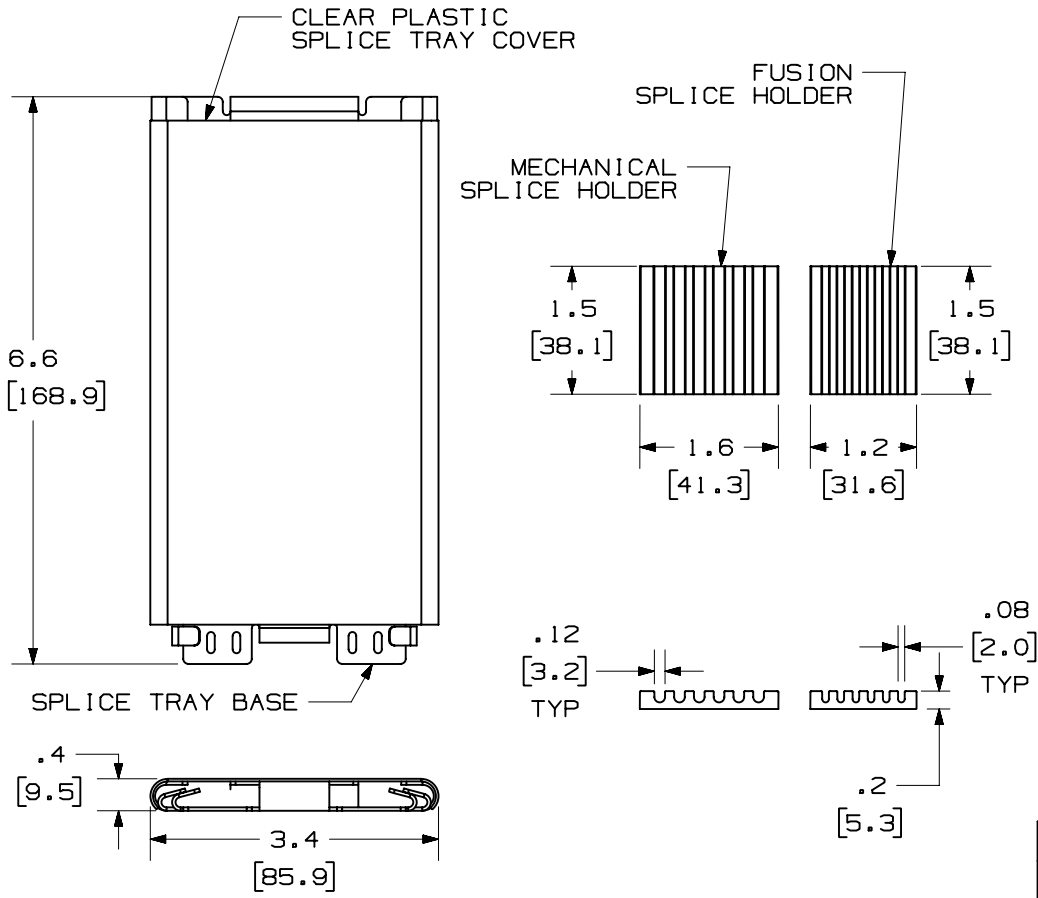

PANDUIT P/N	WEIGHT
FSTK	.2 LB/EA 90 g/EACH

NOTES:
1. SEE CATALOG FOR COMPLETE LIST OF PARTS APPLICABLE FOR USE WITH THIS PRODUCT.
2. DIMENSIONS IN PARENTHESIS ARE METRIC.
3. TRAY WILL HOLD UP TO 6 MECHANICAL OR FUSION SPLICES.
4. INCLUDED WITH SPLICE TRAY:
   1- CLEAR PLASTIC COVER
   1- MECHANICAL SPLICE HOLDER
   1- FUSION HOLDER
   5- GREEN CABLE TIES
   5- BLUE CABLE TIES
   1- 6" PVC TUBE

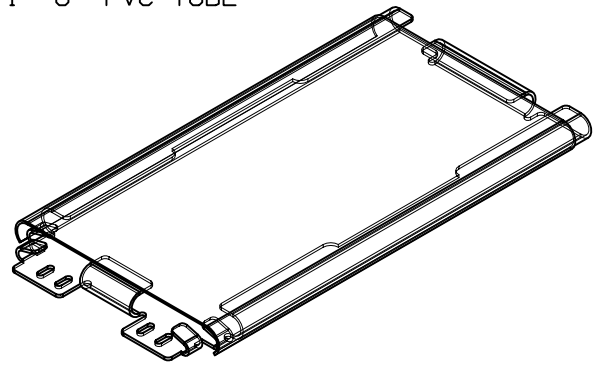

MODEL FILENAME: M00466AT_SPL_TRAY_ASSY_00.PRT

CAD FILENAME/LAYERS: M00466AT_DC_00A.PRT

PANDUIT CORP. TINLEY PARK, ILLINOIS

SPLICE TRAY UNIT
6 MECHANICAL OR FUSION SPLICES
CUSTOMER DRAWING

UNLESS OTHERWISE SPECIFIED, DIMENSIONAL TOLERANCES ARE:
(.X) ± .03 (.XXX) ± .005
(.XX) ± .015 ANGLES ± 1°

UNLESS OTHERWISE SPECIFIED, ALL DIMENSIONS ARE GIVEN IN INCHES, THIRD ANGLE PROJECTION.

DRAWN BY: JDWE
DATE: 5-2-02
CHK'D:
MAT'L: SEE NOTES
SCALE: NONE
DRAWING NO.: 00466-67
DWG SIZE: A

REV	DATE	BY	CHK	DESCRIPTION	ECN - R	CUST	SUP	OTH
R	5-2-02	JDWE		RELEASED TO PRODUCTION	00466-67			